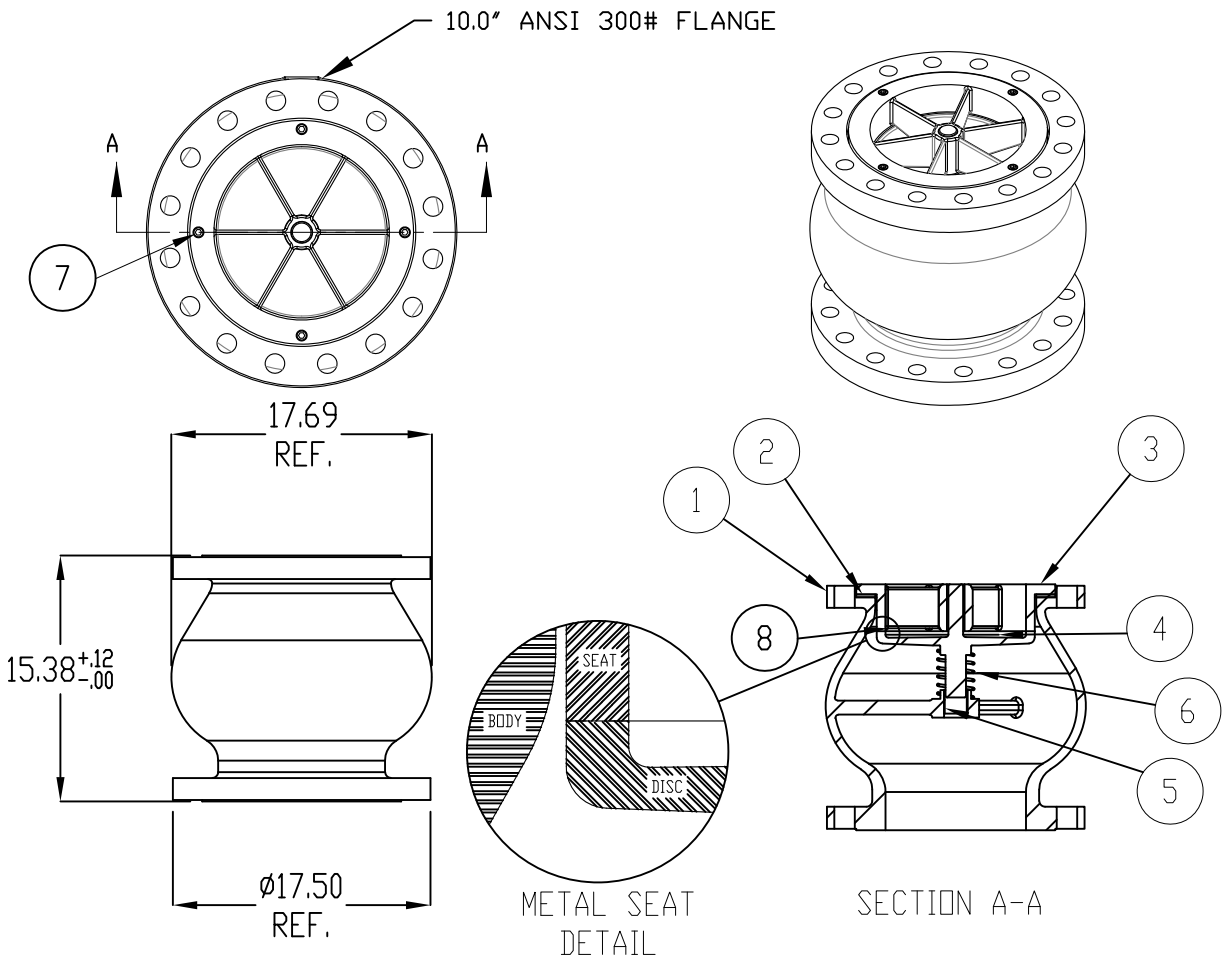

BILL OF MATERIALS

ITEM	QTY	DESCRIP.	MATERIAL
1	1	BODY	A216 WCB
2	1	GASKET	NON ASBESTOS
3	1	SEAT	A351 GR CF8M
4	1	DISK	A351 GR CF8M
5	1	BUSHING	STAINLESS STEEL
6	1	SPRING	STAINLESS STEEL
7	4	CAP SCREWS	STAINLESS STEEL
8	1	SEAT TYPE	INTEGRAL METAL

PRESSURE/TEMPERATURE RATING
740 PSI @ 100°F WOG (NON-SHOCK)
SS SPRING: 450°F MAX
DESIGNED IN REFERENCE WITH
MSS SP-6 STANDARD FINISHES FOR CONNECTING-END FLANGES
MSS SP-25 STANDARD MARKING SYSTEM FOR VLAVES
MSS SP-55 QUALITY STANDARD FOR VALVE CASTINGS
ASME B16.5 PIPE FLANGES & FLANGED FITTINGS
API 594 VALVE DESIGN AND MANUFACTURE
API 598 VALVE INPECTION AND PRESSURE TEST
SHELL TEST 1.5 TIMES RATED WOG PER API 598
EST. ASSEMBLY WT. EMPTY: 272 LBS

PROPRIETARY AND CONFIDENTIAL

THE INFORMATION CONTAINED IN THIS DRAWING IS THE SOLE PROPERTY OF TITAN FLOW CONTROL, INC., AND IS TO BE RETUREND UPON REQUEST. ITS CONTENTS MAY NOT BE DISCLOSED TO OTHER ORGANIZATIONS OR USED FOR OTHER THAN THE EXPRESSED PURPOSE FOR WHICH LOANED.
ANY REPRODUCTION IN PART OR AS A WHOLE WITHOUT THE WRITTEN PERMISSION OF TITAN FLOW CONTROL, INC IS PROHIBITED.

DRAWING FOR:
TITAN
-

REVISIONS

NO.	DESCRIPTION:	DATE
-	-	-
-	-	-
-	-	-
-	-	-
-	-	-
-	-	-

TOLERANCES UNLESS OTHERWISE SPECIFIED:
INCHES
XXX = ±0.010
XX = ±0.020
METRIC
XXX = ±0.25
X = ±0.5
ANGULAR ±0.5
CASTING
XX = ±0.094
√ = 125 MICROINCHES MAX. OR 3.17 MICROMETERS MAX.

MATERIAL
-

FINISH
-

DO NOT SCALE DRAWING

TITAN ®

	NAME	DATE
DRAWN	GWM	7/16/21
CHECKED	SS	7/16/21
ENG APPR.	-	-
MFG APPR.	-	-
Q.A.	-	-

TITAN FLOW CONTROL, INC
290 CORPORATE DRIVE
LUMBERTON, NC 28358
T: 910.735.0000
F: 910.738.3848
titan@titanfci.com

TITLE:
10.00" CV52-CSM CHECK VALVE
300# FLANGED GLOBE CHECK

SIZE	DWG. NO.	REV
A	AN-10.00-CV52CSM-000	—

SCALE: — WEIGHT: — SHEET 1 OF 1