Equipment Rails

Technical Product Information

ER-2A & ER-2B Styles

P.O. NUMBER

CUSTOMER

PROJECT

LOCATION

ARCHITECT

STANDARD CONSTRUCTION

- **18 GAUGE GALVANIZED STEEL**
- **GALVANIZED CAP FLASHING**
- **WOOD NAILER**
  - **"A" STYLE FLUSH**
  - **"B" STYLE _____ OVERHANG**
- **UNITIZED CONSTRUCTION**
- **INTERNAL REINFORCEMENT**
- **CONTINUOUS WELDED CORNER SEAMS**

NOTE: STANDARD LUMBER OVERHANG 1/2" UNLESS SPECIFIED OTHERWISE

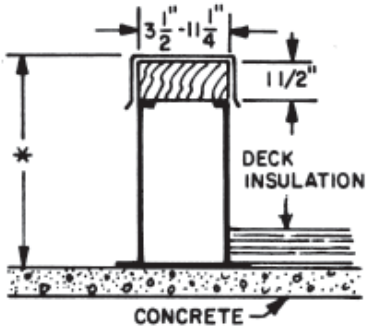

ER-2A STYLE

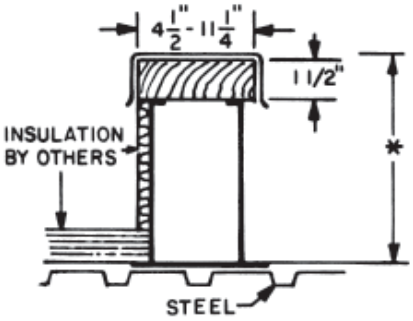

ER-2B STYLE

* NOTE: STANDARD OVERALL HEIGHT 11" UNLESS SPECIFICALLY SHOWN BELOW

PROJECT REQUIREMENTS

QTY.	STYLE	LENGTH	WIDTH	* OVERALL HEIGHT	"B" STYLE NAILER OVERHANG	PITCH REQUIREMENTS		TAG
						LONG SIDE	SHORT SIDE	

ROOF PRODUCTS & SYSTEMS • 815 KIMBERLY DRIVE • CAROL STREAM, IL 60188 • TEL: (800) 624-8642 • FAX: (866) 466-9335

© Copyright, August, 2009, Commercial Products Group of Hart & Cooley, Inc. All Rights Reserved. All information is subject to change without notice. Dimensions and specifications shown are within manufacturing tolerances.