ENGINEERING
TOMORROW

Datasheet

VMT
2-way water valve

Application:

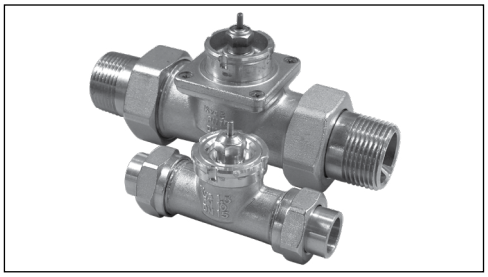

Features:
- Seated globe valve
- Brass body
- Low and high flow capacities
- Double union tail piece connections

The VMT is a 2-way valve used in controlling the flow of hot water within heating applications. The VMT valve can be installed in applications involving heating or chilled coils, hot water storage tanks, plate heat exchangers or floor heating systems. In the control of the VMT valve, a thermostatic operator type RAVK or a 24VAC electric actuator type TWA-V or ABV can be mounted to the valve to regulate the temperature and flow through the valve. The VMT valves are available in ½", ¾", and 1" sizes and the double union connections are available in female sweat unions for ½" and ¾" and male NPT connections for 1".

Ordering Information:

VMT Valves	Code No.	Model	Size	Cv	Connection
w/ Union Connections	**065F0102**	VMT 15/8	1/2"	1.6	F. Sweat Unions
	065F0104	VMT 20/8	3/4"	2.7	F. Sweat Unions
w/ Union Connections (High Capacity)	**065F8960**	VMT 15/2	1/2"	3.3	F. Sweat Unions
	065F8961	VMT 20/2	3/4"	5.9	F. Sweat Unions
	065F1242	VMT 25/2	1"	9.4	M. NPT Unions

Suitable Controls for VMT

Type	Code No.	Model	Setting Range	Capillary Tube Length
Thermostatic Operator	**003L3530**	RAVK [1]	50° to 86°F (10° to 30°C)	6 ft. 6 in. (2 m)
	013U8063		77° to 149°F (25° to 65°C)	
	003L3531		95° to 167°F (35° to 75°C)	
	017-4370	1/2" Brass Sensor Well for RAVK		

Type	Code No.	Model	Valve Function	Supply Voltage	Power Consumption
Electric Actuator	**088H3120**	TWA-V [2]	Normally closed	24 VAC	2.0 VA
	088H3121		Normally open		
	082F0052	ABV	Normally closed		9.0 VA
	082F0002		Normally open		

1. Direct replacement for RAVV. See cross reference chart below. 2. TWA-V should only to be used with VMT 15/8 and VMT 20/8 valves.

Cross Reference Chart

RAVV		>>	RAVK	
013U1251	104° - 158°F (40° - 70°C)	>>	003L3531	95° - 167°F (35° - 75°C)
013U1252	80° - 132°F (27° - 57°C)	>>	013U8063	77° - 149°F (25° - 65°C)
013U1255	50° - 100°F (10° - 38°C)	>>	003L3530	50° - 86°F (10° - 30°C)

Ordering Information (Cont.):

Spare Parts

Code No.	Type	Size
013U0496	Union Nut (Order two pieces per valve)	1/2″
013U0499		3/4″
013U0501		1″
013U0476	Male NPT Tailpiece (Order two pieces per valve)	1/2″
013U0479		3/4″
013U0489		1″
013U8608	Female Sweat Tailpiece (Order two pieces per valve)	1/2″
013U8609		3/4″
013U0070	Packing Gland	

Specifications:

Maximum test pressure	232 psi (16 bar)
Maximum working pressure	145 psi (10 bar)
Maximum flow temperature	250°F (120°C)
Maximum differential pressure (for quiet operation)	VMT 15/8 & 20/8: 12 psi (0.8 bar)
	VMT 15/2, 20/2 & 25/2: 3 psi (0.2 bar)
Allowable fluid	Water (maximum 30% glycol) in a closed loop hydronic system.

VMT Sizing Chart

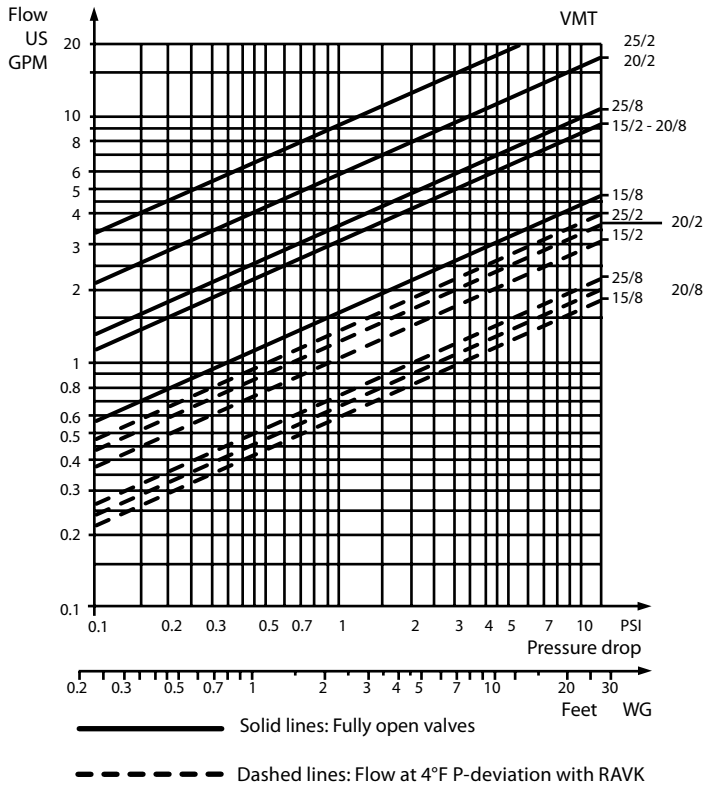

Typical Installations:

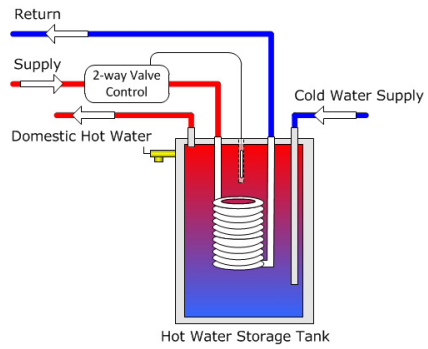

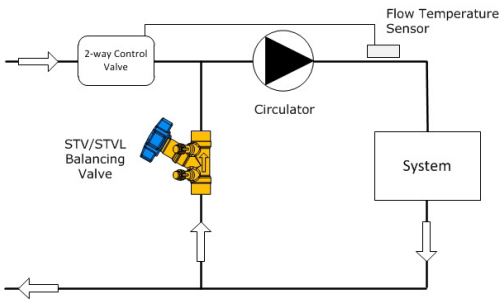

Floor heating system

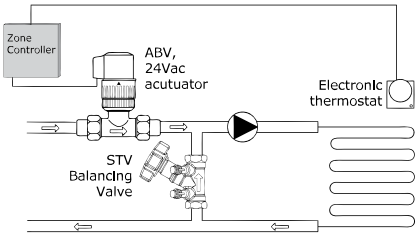

Radiant system with electronic actuator

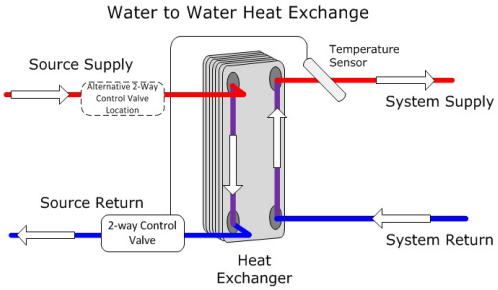

Installation:

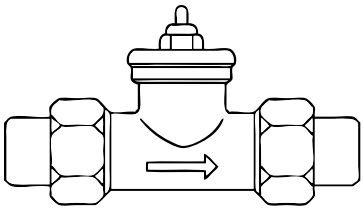

The valve body must be installed in the direction of the flow as noted by the cast-in arrow located on the body of the valve. Failure to install the valve in the proper flow direction may result in system noise during operation.

Construction:

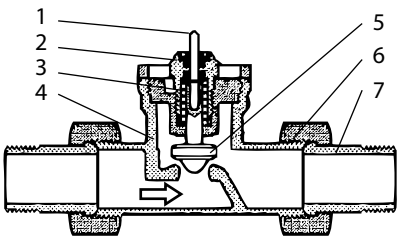

1	**Pressure pin**	Stainless steel
2	**Packing gland**	
3	**O-ring**	EPDM rubber
4	**Valve body**	Brass
5	**Valve cone**	NBR rubber
6	**Union nut**	Brass
7	**Tailpiece**	Brass

© Danfoss | 05/2020

Dimensions:

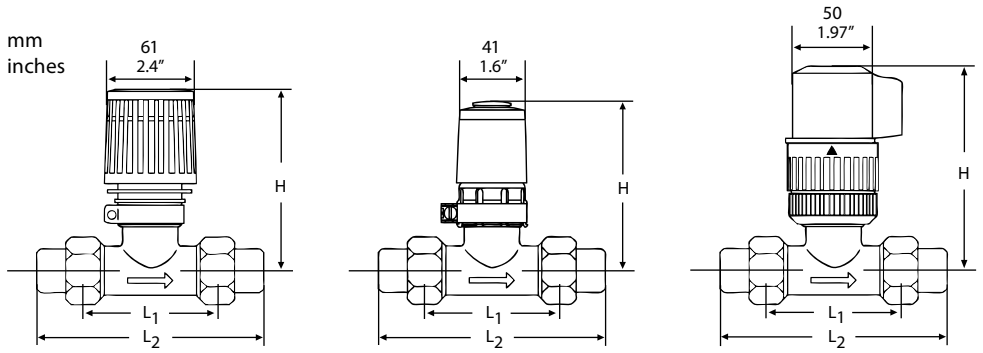

VMT with RAVK actuator | VMT with TWA-V actuator | VMT with ABV actuator

Size	Type	L1 in (mm)	L2, in (mm)		H, in (mm), VMT + control		
			F. solder	M. NPT	RAVK	TWA-V*	ABV
1/2"	VMT 15/8	2.6" (66)	3.9" (99)	5.1" (130)	4.1"(104)	3.6" (91)	4.4" (112)
3/4"	VMT 20/8	2.9" (74)	4.6" (117)	5.7" (145)	4.1" (104)	3.6" (91)	4.4" (112)
1/2"	VMT 15/2	2.6" (66)	3.9" (99)	5.1" (130)	4.3" (109)	-	4.5" (114)
3/4"	VMT 20/2	2.9" (74)	4.6" (117)	5.4" (137)	4.5" (114)	-	4.6" (117)
1"	VMT 25/2	3.6" (91)	-	6.5" (165)	4.7" (119)	-	4.9" (124)

*TWA-V should only be used with VMT 15/8 and VMT 20/8 valves

Typical Specification:

The 2-way mixing valve shall be a brass construction with double union connections for hot water heating applications. The valve shall have a stamped indicator to reflect proper piping of valve within system. The valve shall have a serviceable packing gland that is replaceable. The regulation of the valve shall be by means of thermostatic operator or 24VAC electronic actuator. The actuators mounted onto the valve shall be interchangeable. The 2-way water valve shall be a VMT series.

Danfoss . Heating North America
Learn more at: www.heating.danfoss.us

Danfoss can accept no responsibility for possible errors in printed materials and reserves the right to alter its products without notice.
All trademarks in this material are property of the respective companies. Danfoss and Danfoss logotype are trademarks of Danfoss A/S. All rights reserved.