General Characteristics

Model number (on compressor nameplate)		**MT32JF1MVE**
Code number for Singlepack*		MT32-1VI
Code number for Industrial pack**		MT32-1VM
Drawing number		8501020e
Suction and discharge connections		Rotolock
Suction connection		1-1/4 " Rotolock
Discharge connection		1 " Rotolock
Suction connection with supplied sleeve		5/8 " ODF
Discharge connection with supplied sleeve		1/2 " ODF
Oil sight glass		Threaded
Oil equalization connection		3/8'' flare SAE
Oil drain connection		None
LP gauge port		Schrader
IPR valve		435 psi / 115 psi
Cylinders	1	
Swept volume	3.29 in3/rev	
Displacement @ Nominal speed	399 cfh @ 3500 rpm	
Net weight	53 lbs	
Oil charge	32 oz, Mineral - 160P	
Maximum system test pressure Low Side / High side	363 psi / 435 psi	
Maximum differential test pressure	435 psi	
Maximum number of starts per hour	12	
Refrigerant charge limit	6 lbs	
Approved refrigerants	R22, R417A-160PZ	

Electrical Characteristics

Nominal voltage	208-230V/1/60Hz
Voltage range	187-253 V
Winding resistance (main / start) at 25°C	0,64 Ω / 2,85 Ω
Run capacitors A + C	25 uF + 20 uF
Start capacitor B	100 uF
Start relay	RVA-6AMKL
Maximum Continuous Current (MCC)	26.5 A
Locked Rotor Amps (LRA)	84 A
Motor protection	Internal overload protector

Recommended Installation torques

Oil sight glass	37 ft.lbs
Power connections / Earth connection	ft.lbs / 1 ft.lbs
Mounting bolts	11 ft.lbs

Parts shipped with compressor

Mounting kit with grommets, bolts, nuts, sleeves and washers
Suction & Discharge solder sleeves, rotolock nuts and gaskets (shipped with rotolock version only)
Initial oil charge
Installation instructions

Approvals : CE certified, UL certified (file SA6873), -
*Singlepack: Compressor in cardboard box
**Industrial pack: 12 Unboxed compressors on pallet (order per multiples of 12)

Dimensions

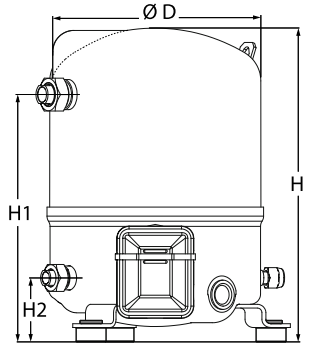

D=8.8 inch, H=14 inch,
H1=10.4 inch, H2=2.7 inch

Terminal box

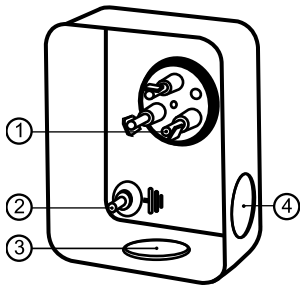

IP55 (with cable gland)
1: Spade connectors 1/4"
2: Earth M4-12
3: Knock-out Ø 21 mm (0.83'')
4: Hole Ø 21 mm (0.83'')

Danfoss can accept no responsibility for possible errors in catalogues, brochures and other printed material. Danfoss reserves the right to alter its products without notice.
This also applies to products already on order provided that such alternations can be made without subsequential changes being necessary in specifications already agreed.
All trademarks in this material are property of the respective companies. Danfoss, the Danfoss logotype and Maneurop are trademarks of Danfoss A/S. All rights reserved.

Rotolock accessories, suction side	Code no.
Solder sleeve, P09 (1-1/4" Rotolock, 5/8" ODF)	8153011
Angle adapter, C09 (1-1/4" Rotolock, 5/8" ODF)	8168009
Rotolock valve, V09 (1-1/4" Rotolock, 5/8" ODF)	8168033
Gasket, 1-1/4"	8156131

Rotolock accessories, discharge side	Code no.
Solder sleeve, P06 (1" Rotolock, 1/2" ODF)	8153007
Angle adapter, C06 (1" Rotolock, 1/2" ODF)	8168007
Rotolock valve, V06 (1" Rotolock, 1/2" ODF)	8168031
Gasket, 1"	8156130

Rotolock accessories, sets	Code no.
Angle adapter set, C09 (1-1/4"~5/8"), C06 (1"~1/2")	7703012
Valve set, V09 (1-1/4"~5/8"), V06 (1"~1/2")	7703005
Gasket set, 1", 1-1/4", 1-3/4", OSG gaskets black & white	8156009

Oil / lubricants	Code no.
Mineral oil, 160P, 2 liter can	7754001
Mineral oil, 160P, 5 liter can	7754002

Crankcase heaters	Code no.
PTC heater 27W	120Z0459
Belt type crankcase heater, 54 W, 230 V, CE mark, UL	7773106

Miscellaneous accessories	Code no.
PSC starting kit, 25 µF, 20 µF	7701152
CSR starting kit, 25 µF, 20 µF, 98 µF	7701155
CSR starting kit, prewired box, 25 µF, 20 µF, 98 µF	7701149
Acoustic hood for 1 cylinder compressor	7755001
Oil equalisation nut	8153127

Spare parts	Code no.
Mounting kit for 1 and 2 cylinder compressor, including 3 grommets, 3 bolts	8156001
Oil sight glass with gaskets (black & white)	8156019
Gasket for oil sight glass (black chloroprene)	8156145
Service kit for terminal box 80 x 96 mm, including 1 cover, 1 clamp	8156134

Gaskets, sleeves and nuts

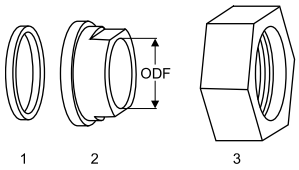

1: Gasket
2: Solder sleeve
3: Rotolock nut

Mounting kit

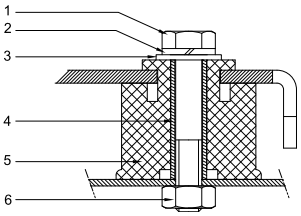

1: Bolt (3x)
2: Lock washer (3x)
3: Flat washer (3x)
4: Sleeve (3x)
5: Grommet (3x)
6: Nut (3x)

Danfoss can accept no responsibility for possible errors in catalogues, brochures and other printed material. Danfoss reserves the right to alter its products without notice.
This also applies to products already on order provided that such alternations can be made without subsequential changes being necessary in specifications already agreed.
All trademarks in this material are property of the respective companies. Danfoss, the Danfoss logotype and Maneurop are trademarks of Danfoss A/S. All rights reserved.

Performance data at 60 Hz, ARI rating conditions

R22

Cond. temp. in °F (tc)	Evaporating temperature in °F (to)								
	-10	0	10	20	30	40	45	50	55
Cooling capacity in Btu/h									
90	10 267	14 309	19 158	24 916	31 684	39 562	43 950	48 653	53 685
100	8 917	12 810	17 468	22 993	29 484	37 044	41 256	45 774	50 609
110	7 685	11 401	15 840	21 102	27 289	34 502	38 525	42 842	47 467
120	-	10 105	14 296	19 268	25 123	31 961	35 780	39 883	44 283
130	-	-	12 860	17 515	23 008	29 443	33 044	36 919	41 080
140	-	-	-	15 864	20 969	26 972	30 342	33 975	37 882
150	-	-	-	-	19 029	24 572	27 697	31 073	34 713
Power input in W									
90	1 750	1 999	2 227	2 419	2 565	2 650	2 666	2 662	2 637
100	1 796	2 065	2 317	2 539	2 720	2 845	2 884	2 904	2 903
110	1 830	2 122	2 402	2 658	2 877	3 048	3 110	3 156	3 183
120	-	2 169	2 481	2 775	3 037	3 255	3 344	3 417	3 473
130	-	-	2 554	2 889	3 197	3 468	3 584	3 687	3 773
140	-	-	-	2 998	3 357	3 683	3 829	3 963	4 082
150	-	-	-	-	3 515	3 900	4 078	4 244	4 398
Current consumption in A									
90	8.83	9.49	10.14	10.73	11.20	11.48	11.53	11.51	11.42
100	8.96	9.67	10.41	11.10	11.70	12.13	12.27	12.34	12.35
110	9.05	9.84	10.67	11.49	12.23	12.83	13.06	13.24	13.35
120	-	9.98	10.92	11.88	12.78	13.58	13.91	14.19	14.42
130	-	-	11.17	12.28	13.37	14.36	14.81	15.21	15.56
140	-	-	-	12.68	13.97	15.19	15.75	16.28	16.76
150	-	-	-	-	14.58	16.04	16.74	17.40	18.03
Mass flow in lbs/h									
90	137	189	249	319	400	493	545	600	659
100	124	176	236	306	388	481	532	587	646
110	112	163	223	293	374	467	518	572	630
120	-	151	211	280	360	451	502	556	614
130	-	-	199	267	345	436	486	539	596
140	-	-	-	255	331	420	469	521	577
150	-	-	-	-	318	404	452	503	558
Energy Efficiency Ratio (E.E.R.)									
90	5.87	7.16	8.60	10.30	12.35	14.93	16.49	18.28	20.36
100	4.96	6.20	7.54	9.06	10.84	13.02	14.31	15.76	17.43
110	4.20	5.37	6.60	7.94	9.48	11.32	12.39	13.58	14.91
120	-	4.66	5.76	6.94	8.27	9.82	10.70	11.67	12.75
130	-	-	5.04	6.06	7.20	8.49	9.22	10.01	10.89
140	-	-	-	5.29	6.25	7.32	7.92	8.57	9.28
150	-	-	-	-	5.41	6.30	6.79	7.32	7.89

Nominal performance at to = 45 °F, tc = 130 °F

Cooling capacity	33 044	Btu/h	Current consumption	14.81	A
Power input	3 584	W	Mass flow	486	lbs/h
E.E.R.	9.22				

Pressure switch settings

Maximum HP switch setting	402	psi(g)
Minimum LP switch setting	3	psi(g)
LP pump down setting	13	psi(g)

T 0 : Evaporating temperature at dew point
T C : Condensing temperature at dew point
Rating conditions : Superheat = 20 °F , Subcooling = 15 °F
All performance data +/- 5%

Sound power data

Sound power level	0	dB(A)
With accoustic hood	0	dB(A)

Danfoss can accept no responsibility for possible errors in catalogues, brochures and other printed material. Danfoss reserves the right to alter its products without notice.
This also applies to products already on order provided that such alternations can be made without subsequential changes being necessary in specifications already agreed.
All trademarks in this material are property of the respective companies. Danfoss, the Danfoss logotype and Maneurop are trademarks of Danfoss A/S. All rights reserved.

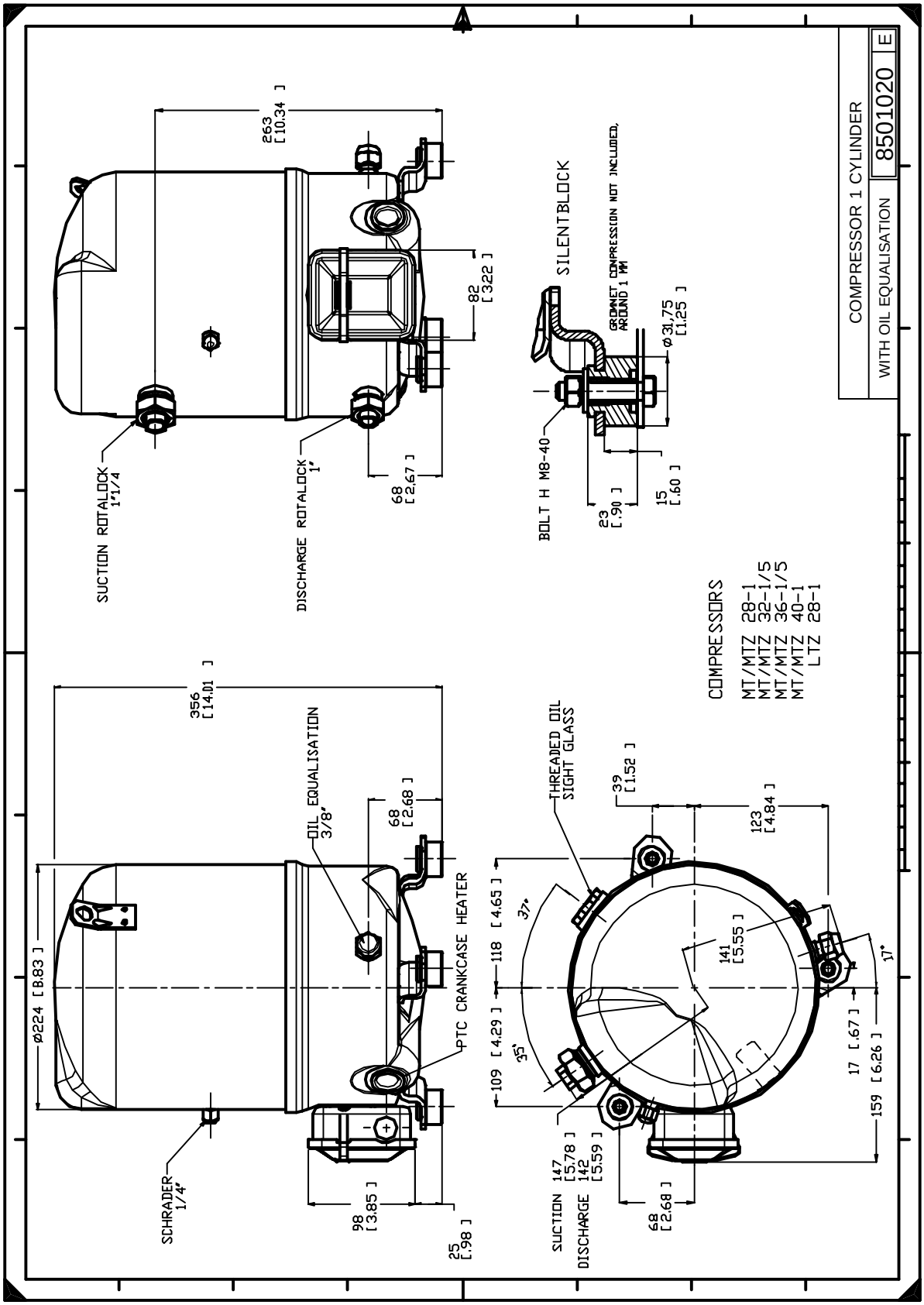

Danfoss can accept no responsibility for possible errors in catalogues, brochures and other printed material. Danfoss reserves the right to alter its products without notice.
This also applies to products already on order provided that such alternations can be made without subsequential changes being necessary in specifications already agreed.
All trademarks in this material are property of the respective companies. Danfoss, the Danfoss logotype and Maneurop are trademarks of Danfoss A/S. All rights reserved.