PRODUCT INFORMATION PACKET

Model No: D1056
Catalog No: D1056
Fan and Blower Motor, 1/2 HP, 1 Ph, 60 Hz, 208-230 V, 1075 RPM, 3 Speed, 48 Frame, OPEN

Regal and Century are trademarks of Regal Rexnord Corporation or one of its affiliated companies.
©2022 Regal Rexnord Corporation, All Rights Reserved. MC017097E

Nameplate Specifications

Output HP	**1/2 Hp**	Output KW	**0.37 kW**
Frequency	**60 Hz**	Voltage	**208-230 V**
Current	**3.6 A**	Speed	**1075 rpm**
Service Factor	**1**	Phase	**1**
Efficiency	**60 %**	Duty	**Air Over**
Insulation Class	**B**	Frame	**48**
Enclosure	**Open Enclosed**	Thermal Protection	**Automatic**
Ambient Temperature	**40 °C**	UL	**Recognized**
CSA	**Y**	CE	**N**
Number of Speeds	**3**		

Technical Specifications

Electrical Type	**Permanent Split Capacitor**	Starting Method	**Across The Line**
Poles	**6**	Rotation	**Reversible**
Mounting	**Resilient Rings**	Motor Orientation	**Horizontal**
Drive End Bearing	**Ball**	Opp Drive End Bearing	**Ball**
Frame Material	**Rolled Steel**	Shaft Type	**Flat**
Overall Length	**9.86 in**	Frame Length	**4.25 in**
Shaft Diameter	**0.500 in**	Shaft Extension	**4.5 in**
Connection Drawing	**614131-151**	Outline Drawing	**D1056_FA**

This is an uncontrolled document once printed or downloaded and is subject to change without notice. Date Created:11/29/2022

Uncontrolled Copy

GENERAL INFORMATION:

SHAFT RUNOUT:	.001[.03] T.I.R. PER INCH LENGTH OF EXTENSION
BEARINGS:	BALL
MOUNTING POSITION:	HORIZONTAL

ELECTRICAL DATA:

OVERLOAD PROTECTOR:	AUTOMATIC RESET (SENSATA 7AM 036)
LINE LEADS:	NO. 18 GA., .03[.8] THK., XLP 125°C INSUL.
REVERSING LEADS:	NO. 18 GA., .03[.8] THK., XLP 125°C INSUL.
GROUND LEADS:	NO. 18 GA., .03[.8] THK., (GREEN) INSUL.

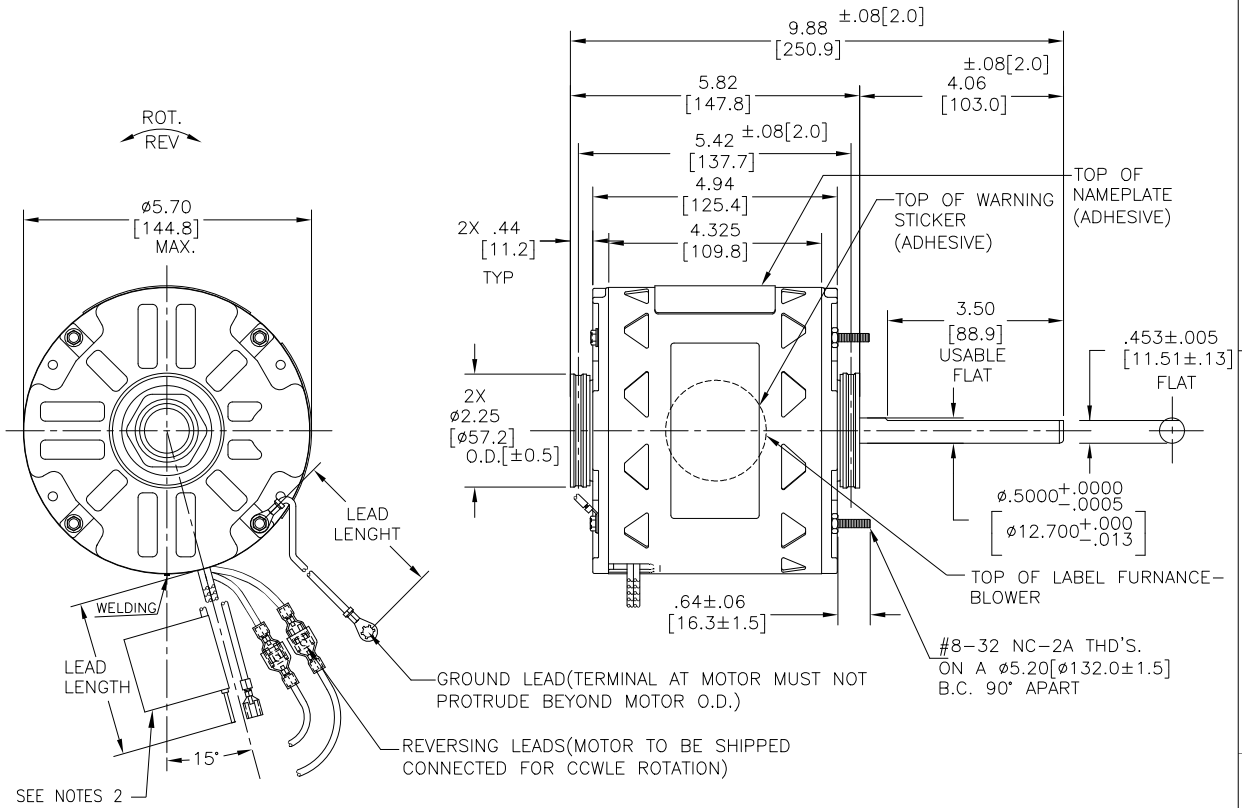

SAMPLE SM19-487 NAMEPLATE DATA:	EXTERNAL CONNECTION DIAGRAM
MODEL: 5KCP39MGDD699S CUST. P/N: D1056 HP: 1/2 ROT: REVERSIBLE RPM: 1075/3 SPD TYPE: UF FRAME: 48Y VOLTS: 208-230 PH: 1 AMPS: 3.6 HZ: 60 INS: B AMB: 40 °C DUTY: AIR OVER CAP.: 7.5 MFD/370V THERMALLY PROTECTED E27885 MADE IN INDIA	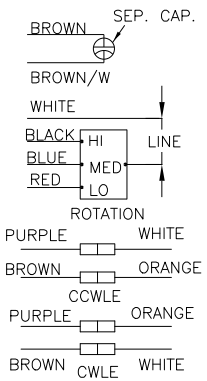

LEAD DATA		
COLOR	LENGTH	TERMINAL OR STRIP LENGTH
RED	25.0/27.0 [635/686]	.60[15.2] SKIN
BLUE	25.0/27.0 [635/686]	.60[15.2] SKIN
BLACK	25.0/27.0 [635/686]	.60[15.2] SKIN
WHITE	25.0/27.0 [635/686]	.60[15.2] SKIN
BROWN/WHITE	25.0/27.0 [635/686]	.25[6.4] FEMALE SPADE
BROWN	25.0/27.0 [635/686]	.25[6.4] FEMALE SPADE
BROWN (REV)	4.0/6.0 [102/152]	.25[6.4] PER-INSUL. FEMALE SPADE
ORANGE(REV)	4.0/6.0 [102/152]	.25[6.4] PER-INSUL. MALE SPADE
PURPLE(REV)	4.0/6.0 [102/152]	.25[6.4] PER-INSUL. FEMALE SPADE
WHITE (REV)	4.0/6.0 [102/152]	.25[6.4] PER-INSUL. MALE SPADE
GREEN (GRD)	9.0/11.0 [229/279]	10# EYELET

NOTES:
1. SPLIT RING ADAPTOR 615035 (4 REQ'D) TO BE PACKED WITH EACH MOTOR.
2. ATTACH WARNING/CONNECTION LABEL TO COMMON (WHITE) LEAD APPROX. 2.0[51] FROM MOTOR (ADHESIVE).
3. ALL LABEL READ FROM LE.
4. SPRING SHIM/THRUST WASHER IN OLE SIDE.

REGAL-BELOIT CORPORATION (RBC) PROVIDES TECHNICAL ASSISTANCE TO OUR CUSTOMERS IN SEVERAL AREAS. SINCE RBC DOES NOT RECEIVE ALL DATA CONCERNING THE USE AND APPLICATION OF THE MOTOR, THE SUITABILITY OF THE MOTOR FOR THE APPLICATION MUST BE DETERMINED BY THE CUSTOMER.

DIMENSIONS WITHOUT TOLERANCES ARE FOR REFERENCE ONLY.

ENCLOSURE	
END FRAME - LE	OPEN
MAIN FRAME - LE	OPEN
END FRAME - OLE	OPEN
MAIN FRAME - OLE	OPEN

CUSTOMER	DISTRIBUTION SERVICES

DRAWING REVISION	REVISION BY	DATE
C	MG	06-04-22
ECO	APPROVED BY	DATE
ECR-0216723	LS	06-04-22

ECO DESCRIPTION
Endshield view updated and Endplay removed from general information

COPYRIGHT REGAL BELOIT AMERICA, INC. ALL RIGHTS RESERVED.
PROPRIETARY AND CONFIDENTIAL INFORMATION - THIS DOCUMENT IS THE PROPERTY OF REGAL BELOIT AMERICA, INC. ("OWNER") AND CONTAINS OWNER'S PROPRIETARY INFORMATION. ANY PERSON, CORPORATION OR OTHER FIRM RECEIVING IT IS DEEMED, BY RECEIVING IT, TO AGREE THAT IT, AND/OR ANY PART OF IT, SHALL NOT BE DISCLOSED TO ANY PERSON, CORPORATION OR OTHER ENTITY, DUPLICATED, AND/OR USED, EXCEPT AS EXPRESSLY APPROVED IN WRITING IN ADVANCE BY OWNER. THIS DOCUMENT SHALL BE RETURNED TO OWNER UPON REQUEST. IT MAY BE SUBJECT TO CERTAIN RESTRICTIONS UNDER APPLICABLE EXPORT CONTROL LAWS AND REGULATIONS.

DRAWN BY:	MANOJ
DATE:	16.01.20
APPROVED BY:	LS
DATE:	16.01.20
PROCESS/FINISH	-
THIRD ANGLE PROJECTION	

REGAL™ Regal Beloit America, Inc.

DESCRIPTION: MODEL-RFHP-48FR OUTLINE

MATERIAL: -

SIZE	DWG NO	SHEET
C	D1056_FA	1

Uncontrolled Copy

REV	ECO	REV BY	DATE	APPD	DATE
C	0016999	A. NAJERA	03-17-2011	M. ARGUELLES	03-17-2011

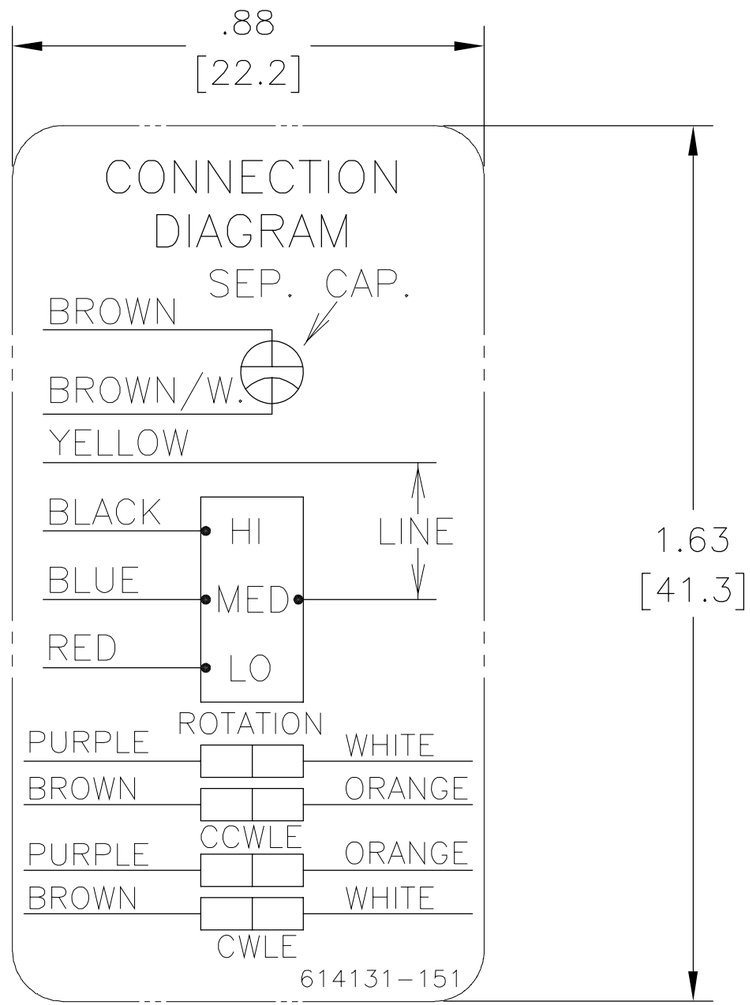

NOTES:
1. FOR USE WITH 614129 NAMEPLATE BLANK
2. —— - - —— INDICATES DIMENSIONAL LIMITS.
3. DIE TO BE MADE FROM MASTER SUPPLIED BY A.O. SMITH CORP.
4. DIE MUST PRODUCE A LEGIBLE IMPRESSION.

GEOMETRIC CHARACTERISTICS & SYMBOLS
- FLATNESS
- STRAIGHTNESS
- ANGULARITY
- PERPENDICULARITY (SQUARENESS)
- PARALLELISM
- ROUNDNESS (CIRCULARITY)
- CYLINDRICITY
- PROFILE OF ANY SURFACE
- PROFILE OF ANY LINE
- RUNOUT
- TRUE POSITION
- CONCENTRICITY
- SYMMETRY

UNLESS OTHERWISE SPECIFIED
DIM. TOLERANCES ARE AS FOLLOWS:

	X	XX	XXX	XXXX
INCH	±.1	±.02	±.005	±.0005
mm	±0.5	±0.13	±0.013	

ANG. ±.50 DEG
REMOVE BURRS & BREAK SHARP EDGES:
INCH .003-.015 mm 0.1-0.4
CORNER FILLETS TO:
INCH .020 mm 0.5
MACHINE SURFACES:
INCH 125 mm 3.2
METRIC DIMS. SHOWN IN [BRACKETS]

DR BY: JMW 09-29-89
APPD: . .
THIRD ANGLE PROJECTION
EDS DATE 02-22-2008
FORMAT REV F

CONFIDENTIAL: THIS DRAWING AND ITS INFORMATION ARE THE EXCLUSIVE AND CONFIDENTIAL PROPERTY OF A.O. SMITH CORP. AND ARE NOT TO BE DISCLOSED, DUPLICATED, DISTRIBUTED OR OTHERWISE USED WITHOUT THE WRITTEN CONSENT OF A.O. SMITH CORP.
-ALL RIGHTS RESERVED.
ASME Y14.5M 1994

AO Smith Innovation has a name.
ELECTRICAL PRODUCTS COMPANY
A DIVISION OF A. O. SMITH CORPORATION

DESCRIPTION
CONN DIAGRAM NAMEPLATE

SIZE A
DWG NO 614131-151
SCALE NONE
SHEET 1

Uncontrolled Copy

REVISION:	ECO	REVISADO POR:	FECHA:	APROBADO POR:	FECHA:
C	0016999	A. NAJERA	03-17-2011	M. ARGUELLES	03-17-2011

NOTAS:

1. PARA USAR CON LA PLACA DE DATOS BLANCA 614129
2. —— - - —— INDICA LOS LIMITES DIMENSIONALES.
3. EL DADO ES HECHO A PARTIR DEL ABASTECIMIENTO MAESTRO POR A.O. SMITH CORP.
4. EL DADO TIENE QUE SER FABRICADO CON UNA IMPRESION LEGIBLE.

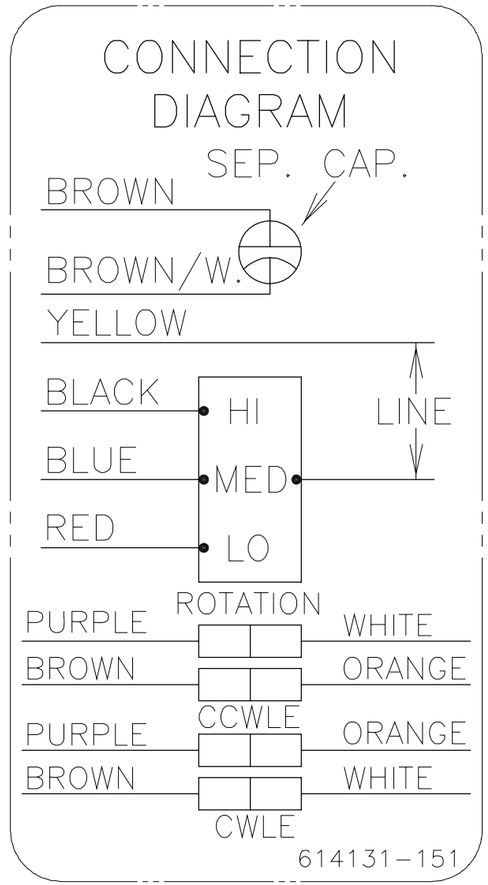

CARACTERISTICAS DE GEOMETRIA Y SIMBOLOS
- PLANICIDAD
- RECTITUD
- ANGULARIDAD
- PERPENDICULARIDAD (A ESCUADRA)
- PARALELISMO
- REDONDEZ (CIRCULARIDAD)
- CILINDRICIDAD
- PERFIL DE CUALQUIER SUPERFICIE
- PERFIL DE CUALQUIER LINEA
- VARIACION
- POSICION REAL
- CONCENTRICIDAD
- SIMETRIA

A MENOS QUE SE ESPECIFIQUE DE OTRA MANERA, LAS TOLERANCIAS DE LAS DIMS; SON LAS SIGUIENTES:

	X	XX	XXX	XXXX
PULG	±.1	±.02	±.005	±.0005
mm	±0.5	±0.13	±0.013	

ANG. ±.50 GRADOS
ELIMINAR REBABAS Y ORILLAS FILOSAS DEL BORDE.
PULG .003-.015 mm 0.1-0.4
FILETEAR ESQUINA: PULG .020 mm 0.5
MAQUINAR SUPERFICIES
PULG 125 mm 3.2
DIMS METRICAS MOSTRADAS [PARENTESIS]

DIBUJADO POR: JMW	09-29-89
APROBADO POR: .	.
TERCER ANGULO DE PROYECCION	FECHA EDS: 02-22-2008
	REV. FORMATO: F

CONFIDENCIAL: ESTE DIBUJO Y SU INFORMACION SON PROPIEDAD DE USO EXCLUSIVO Y CONFIDENCIAL DE A.O.SMITH CORP. Y NO DEBERAN SER REVELADOS, DUPLICADOS, DISTRIBUIDOS O USARSE DE OTRA MANERA SIN EL CONSENTIMIENTO ESCRITO DE A.O. SMITH CORP. -TODOS LOS DERECHOS RESERVADOS. ASME Y14.5M 1994

AO Smith Innovation has a name.

ELECTRICAL PRODUCTS COMPANY
A DIVISION OF A. O. SMITH CORPORATION

DESCRIPCION: CONN DIAGRAM NAMEPLATE

TAMAÑO: A	NUMERO DE DIBUJO: 614131-151
ESCALA: NONE	HOJA: 1

Uncontrolled Copy

版本	ECO	编制	日期	批准	日期
C	0016999	A. NAJERA	03-17-2011	M. ARGUELLES	03-17-2011

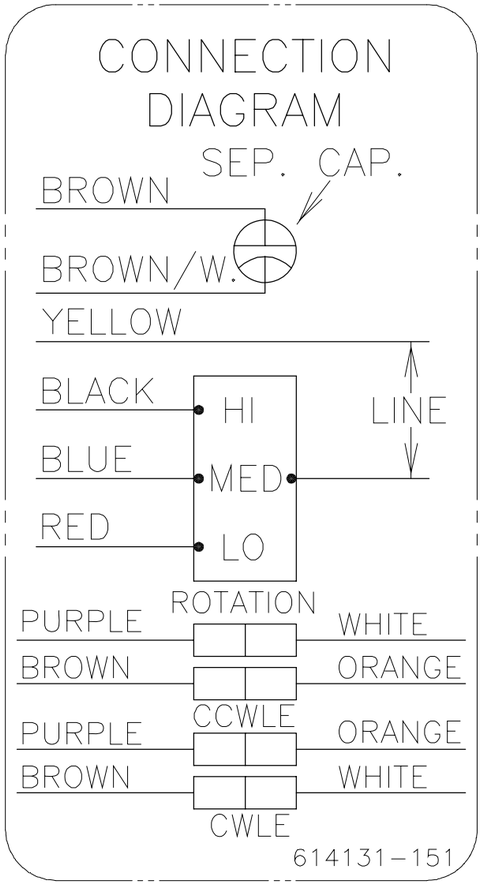

形位公差
▱ 平面度
— 直线度
∠ 倾斜度
⊥ 垂直度
// 平行度
○ 圆度
⌭ 圆柱度
⌓ 面轮廓度
⌒ 线轮廓度
↗ 圆跳动
⌖ 位置度
◎ 同轴度
⌯ 对称度

除另有注明
尺寸公差如下：

	X	XX	XXX	XXXX
英寸	±.1	±.02	±.005	±.0005
毫米	±0.5	±0.13	±0.013	

角度 ±.50 度
清理毛刺和尖棱
英寸 .003-.015 毫米 0.1-0.4
内圆角
英寸 .020 毫米 0.5
表面粗糙度
英制 125 米制 3.2

米制尺寸显示在[ ]

绘图: JMW	09-29-89
批准: .	.
第三角投影	图纸格式发布日期 02-22-2008
	图纸格式版本 F

机密：本图纸及相关信息所有权归A.O.SMITH公司所有。
未经A.O.SMITH公司书面授权，不得泄露、复制、传播或作其他用途。--版权所有

ASME Y14.5M 1994

AO Smith Innovation has a name.
ELECTRICAL PRODUCTS COMPANY
A DIVISION OF A. O. SMITH CORPORATION

名称 CONN DIAGRAM NAMEPLATE

图幅	图号	
A	614131-151	
比例 NONE		页号 1