PRODUCT INFORMATION PACKET

Model No: C682ES
Catalog No: C682ES
1.0 HP General Purpose Motor, 1 phase, 1800 RPM, 115/208-230 V, 56 Frame, ODP
General Purpose Motors

Regal and Century are trademarks of Regal Rexnord Corporation or one of its affiliated companies.
©2021 Regal Rexnord Corporation, All Rights Reserved. MC017097E

Nameplate Specifications

Output HP	**1.0 Hp**	Output KW	**0.75 kW**
Frequency	**60 Hz**	Voltage	**115/208-230 V**
Current	**8/4.4-4 A**	Speed	**1725 rpm**
Service Factor	**1.25**	Phase	**1**
Duty	**Continuous**	Insulation Class	**B**
Frame	**56**	Enclosure	**Drip Proof**
Thermal Protection	**Thermally Protected**	Ambient Temperature	**40 °C**
UL	**Recognized**	CSA	**Y**
CE	**Y**	Number of Speeds	**1**

Technical Specifications

Electrical Type	**Capacitor Start Capacitor Run**	Starting Method	**Across The Line**
Poles	**4**	Rotation	**Selective Counterclockwise**
Mounting	**Rigid Base**	Drive End Bearing	**Ball**
Opp Drive End Bearing	**Ball**	Frame Material	**Rolled Steel**
Shaft Type	**NEMA 56**	Overall Length	**12.49 in**
Frame Length	**6.75 in**	Shaft Diameter	**0.625 in**
Shaft Extension	**1.88 in**		
Connection Drawing	**DD10025-001**	Outline Drawing	**OL56100210-001**

This is an uncontrolled document once printed or downloaded and is subject to change without notice. Date Created:10/07/2021

Uncontrolled Copy

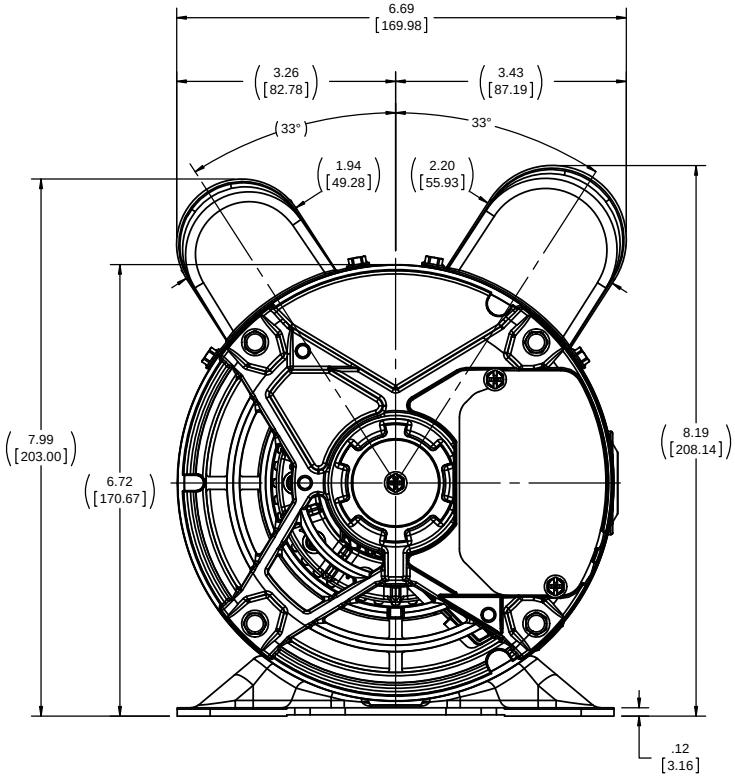

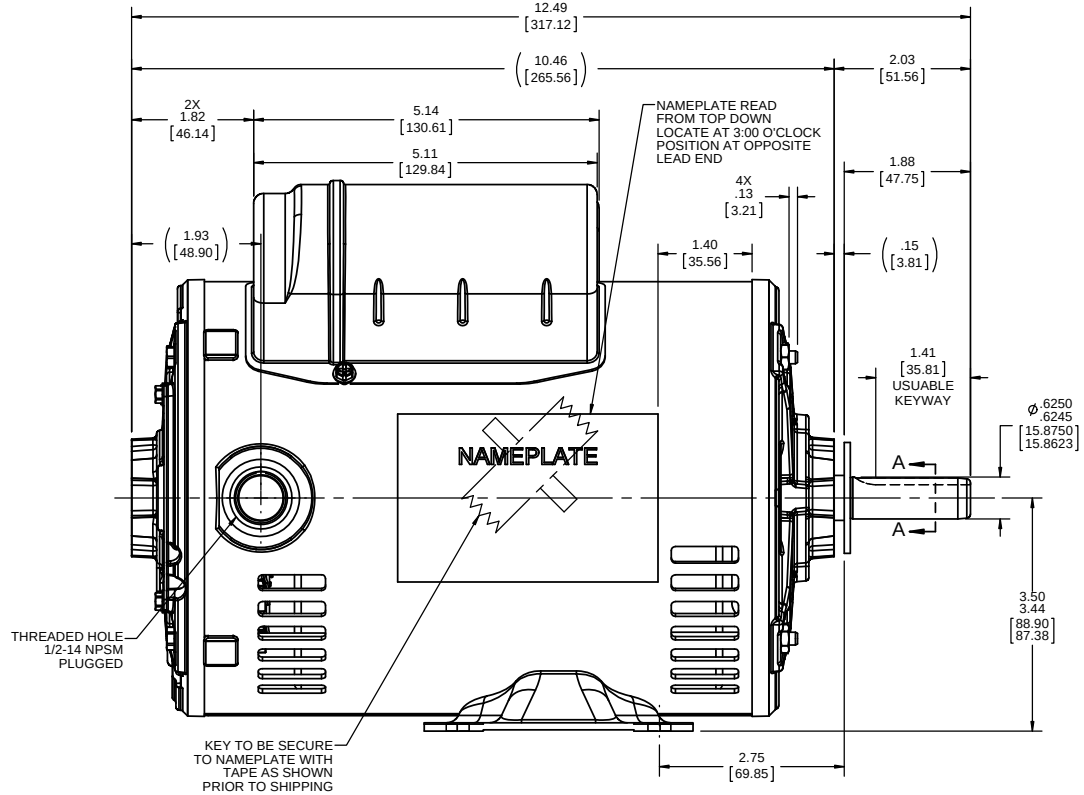

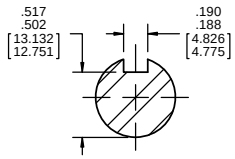

SECTION A-A

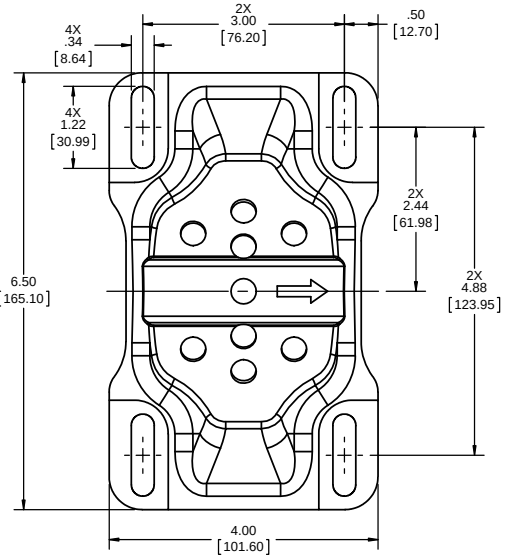

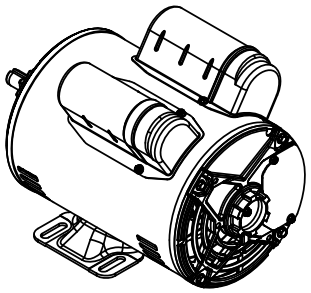

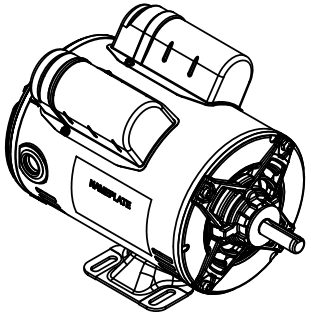

DRAWING REVISION A	REVISION BY D.VALENCIANO	DATE 12-02-2016	TOLERANCES UNLESS OTHERWISE SPECIFIED:	DRAWN BY D.VALENCIANO
ECO ECO-0114082	APPROVED BY	DATE	DEC. / INCH / mm / ANGLE .X ±0.1 [±2.5] ±0.5° .XX ±0.03 [±0.76] .XXX ±0.005 [±0.127] .XXXX ±0.0005 [±0.0127]	DATE 12-02-2016
ECO DESCRIPTION NEW MODEL RELEASE			REMOVE BURRS & BREAK SHARP EDGES: .003/.015 [.076/.381] X 45° CORNER FILLETS: R.02 [.51] MACHINED SURFACES: 125 INCH / 3.2 mm mm SHOWN IN [BRACKETS]	APPROVED BY J.ORTEGA
				DATE 12-02-2016
				REFERENCE
THIRD ANGLE PROJECTION				

COPYRIGHT REGAL BELOIT AMERICA, INC. ALL RIGHTS RESERVED.
PROPRIETARY AND CONFIDENTIAL INFORMATION - THIS DOCUMENT IS THE PROPERTY OF REGAL BELOIT AMERICA, INC. ("OWNER") AND CONTAINS OWNER'S PROPRIETARY INFORMATION. ANY PERSON, CORPORATION OR OTHER FIRM RECEIVING IT IS DEEMED, BY RECEIVING IT, TO AGREE THAT IT, AND/OR ANY PART OF IT, SHALL NOT BE DISCLOSED TO ANY PERSON, CORPORATION OR OTHER ENTITY, DUPLICATED, AND/OR USED, EXCEPT AS EXPRESSLY APPROVED IN WRITING IN ADVANCE BY OWNER. THIS DOCUMENT SHALL BE RETURNED TO OWNER UPON REQUEST. IT MAY BE SUBJECT TO CERTAIN RESTRICTIONS UNDER APPLICABLE EXPORT CONTROL LAWS AND REGULATIONS.

Regal Beloit America, Inc.

DESCRIPTION
OUTLINE
56FR,ODP,1-PHASE,RIGID

MATERIAL | PROCESS/FINISH

SIZE	DRAWING NUMBER	SHEET
C	OL56100210-001	1 OF1

Uncontrolled Copy

LOW VOLTAGE

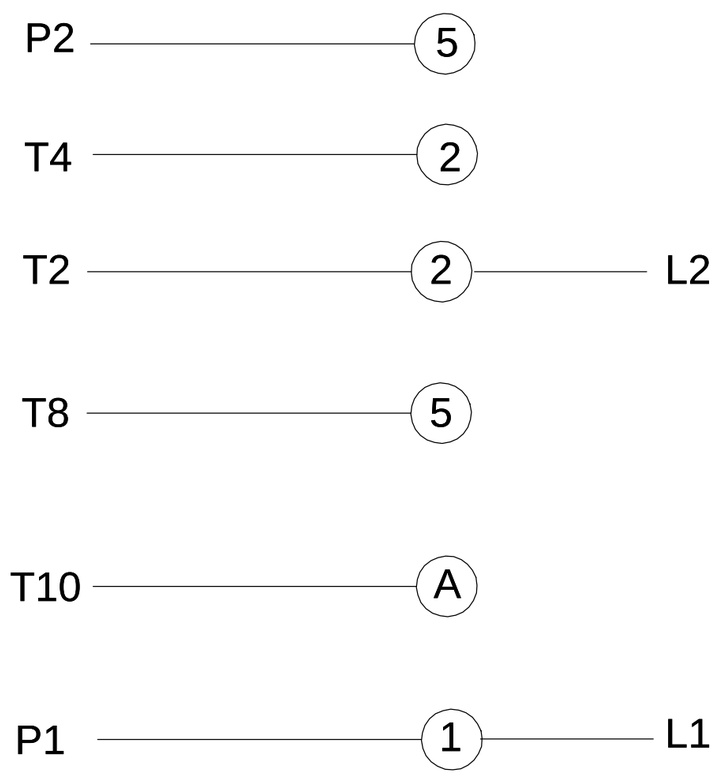

HIGH VOLTAGE

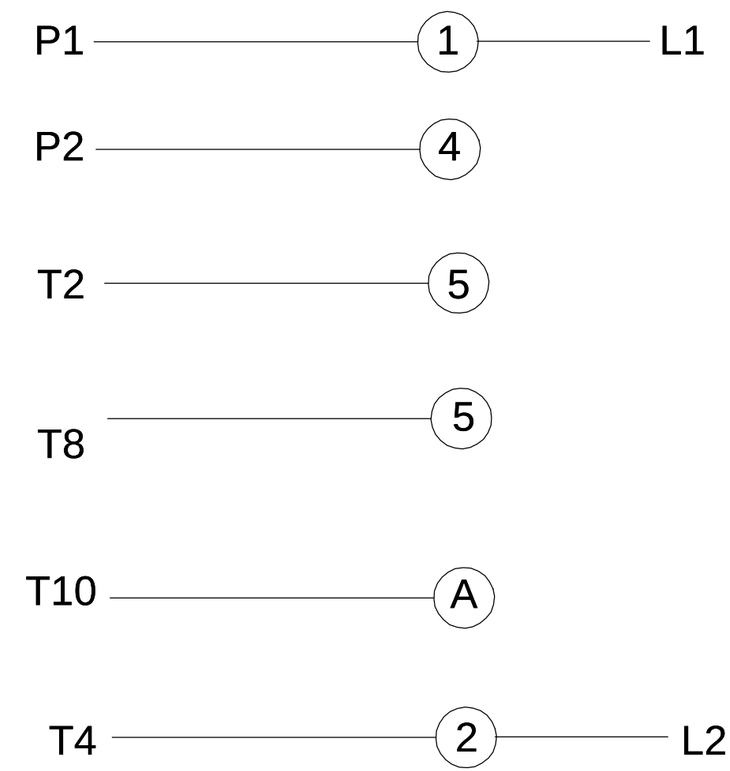

DD10025-001

ROTATION CCW-LE TO REVERSE EITHER VOLTAGE INTERCHANGE T8 AND T10 LEADS

PLATE: 41365

SLOT: 22

DRAWING REVISION	REVISION BY	DATE
B	A.ARREOLA	03-22-2018
ECO: ECO-0137052	APPROVED BY: A.ARREOLA	DATE: 03-22-2018
ECO DESCRIPTION: UPDATE TO SYSTEM		

COPYRIGHT REGAL BELOIT AMERICA, INC. ALL RIGHTS RESERVED.
PROPRIETARY AND CONFIDENTIAL INFORMATION - THIS DOCUMENT IS THE PROPERTY OF REGAL BELOIT AMERICA, INC. ("OWNER") AND CONTAINS OWNER'S PROPRIETARY INFORMATION. ANY PERSON, CORPORATION OR OTHER FIRM RECEIVING IT IS DEEMED, BY RECEIVING IT, TO AGREE THAT IT, AND/OR ANY PART OF IT, SHALL NOT BE DISCLOSED TO ANY PERSON, CORPORATION OR OTHER ENTITY, DUPLICATED, AND/OR USED, EXCEPT AS EXPRESSLY APPROVED IN WRITING IN ADVANCE BY OWNER. THIS DOCUMENT SHALL BE RETURNED TO OWNER UPON REQUEST. IT MAY BE SUBJECT TO CERTAIN RESTRICTIONS UNDER APPLICABLE EXPORT CONTROL LAWS AND REGULATIONS.

TOLERANCES UNLESS OTHERWISE SPECIFIED:

DEC.	INCH	mm	ANGLE
.X	±0.1	[±2.5]	±0.5°
.XX	±0.01	[±0.25]	
XXX	±0.005	[±0.127]	
.XXXX	±0.0005	[±0.0127]	

REMOVE BURRS & BREAK SHARP EDGES: .003/.015 [.076/.381] X 45 °
CORNER FILLETS: R.02 [.51]
MACHINED SURFACES: 125 INCH / 3.2 mm
mm SHOWN IN [BRACKETS]

DRAWN BY	C. CONTRERAS
DATE	10-06-2016
APPROVED BY	C. CONTRERAS
DATE	10-06-2016
REFERENCE	
THIRD ANGLE PROJECTION	

REGAL™ Regal Beloit America, Inc.

DESCRIPTION: CONN DIAGRAM-NAMEPLATE

MATERIAL | PROCESS/FINISH

SIZE: B | DRAWING NUMBER: DD10025-001 | SHEET: 1 OF 1