Bray Controls Commercial Division
13788 West Road, Suite 200A
Houston, Texas 77041

BCDSales@Bray.com
Phone: 1-888-412-2729
Fax: 1-888-412-2720
www.braycommercialdivision.com

Simple Set Max Series

03/10/20

2-Way , 2-1/2" – 12" — Installation Instructions

Product Description

Bray's Simple Set Max combines an externally adjustable dynamic balancing valve with a full authority modulating control valve. Available in both ANSI 125/150 and ANSI 250/300 configurations.

Safety Instructions

The manufacturer is not liable for any damage resulting from use other than in the designated application.
Such risk lies entirely with the user. Observance of the mounting instructions is considered as part of the valve designated use.

Figure 1 Installation

Bray's Simple Set Max can be mounted in either the supply or the return line. Installation of strainers and isolation ball valves are recommended. The temperature in and about the actuator should not be below 14˚F (-10˚C).

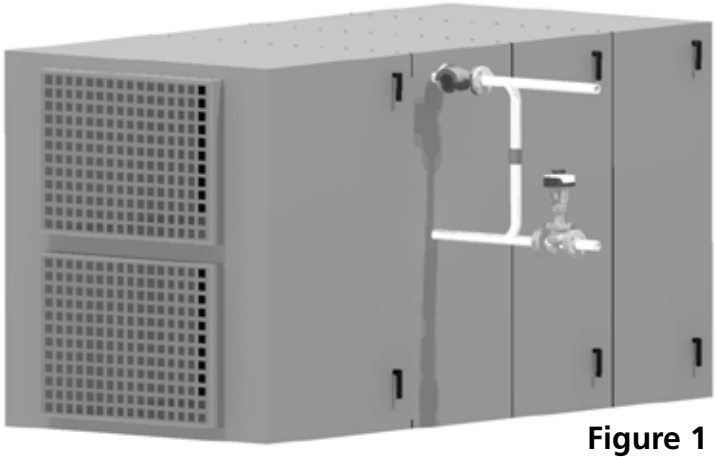

Figure 1

Figure 2

Actuator mounting position

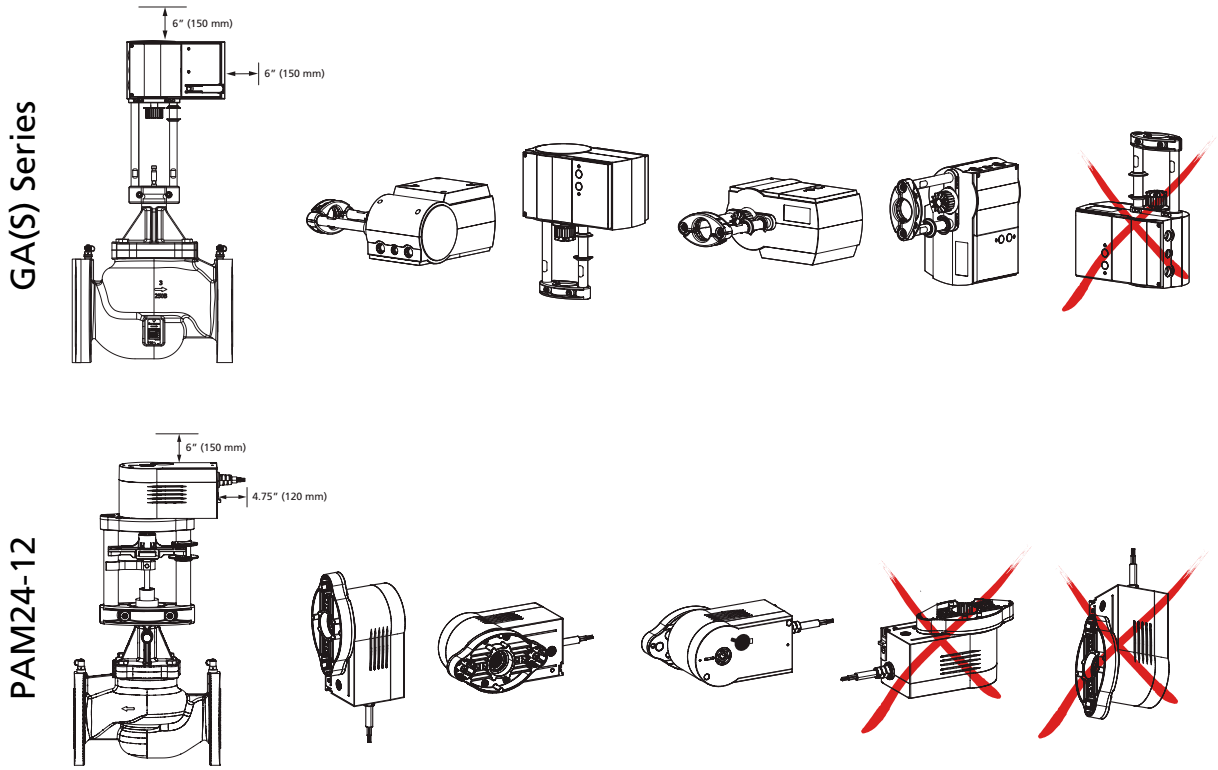

GA - Non-Spring Return Wiring

Modulating

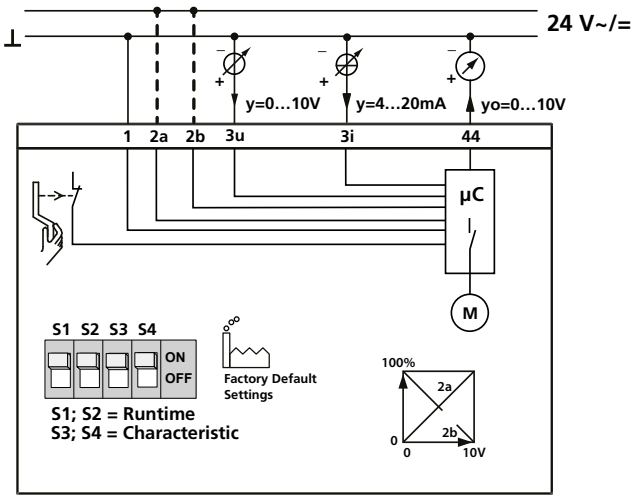

On/Off (2pt)

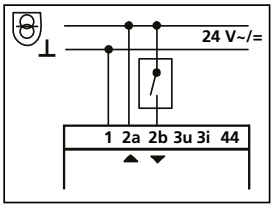

Floating (3pt)

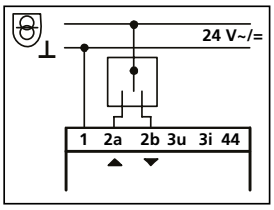

= Extra Low Voltage

Auxillary Switches - Optional
0372333 001
0372333 002

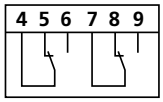

Y =	Modulating signal
1=	Neutral/Common for power and signal
2a/2b-	These terminals determine forward acting/reverse acting. One should be powered with 24V. 2a = Extends. 0 volts = 0% extended. 10V = 100% extended 2b = Retracts. 0 volts = 100% extended. 10V = 0% extended
3u =	0…10 V, in case of control by voltage
3i =	4…20 mA, in case of control by current
44 =	0…10 V Feedback, independent from the use of 3u or 3i

GAS - Spring Return Wiring

Modulating

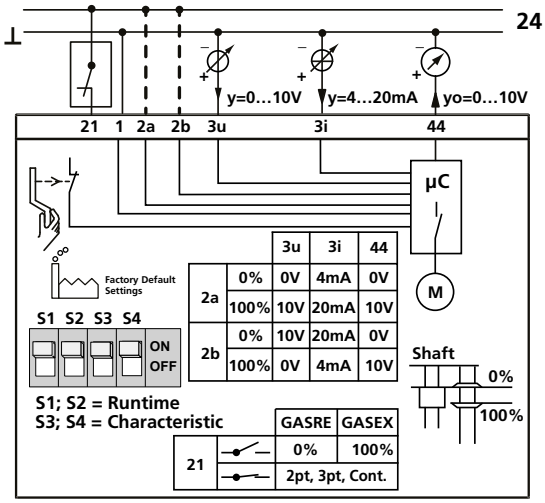

		3u	3i	44
2a	0%	0V	4mA	0V
	100%	10V	20mA	10V
2b	0%	10V	20mA	0V
	100%	0V	4mA	10V

		GASRE	GASEX
21		0%	100%
		2pt, 3pt, Cont.	

On/Off (2pt)

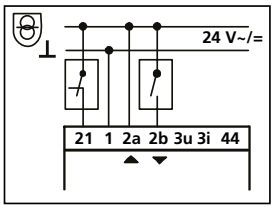

Floating (3pt)

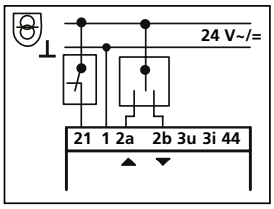

= Extra Low Voltage

Auxillary Switches - Optional
0372333 001
0372333 002

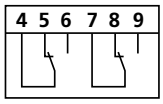

Y =	Modulating signal
21=	Latch voltage for the spring. Lose of power here causes the spring to drive to the fail position.
1=	Neutral/Common for power and signal
2a/2b-	These terminals determine forward acting/reverse acting. One should be powered with 24V. 2a = Extends. 0 volts = 0% extended. 10V = 100% extended 2b = Retracts. 0 volts = 100% extended. 10V = 0% extended
3u =	0…10 V, in case of control by voltage
3i =	4…20 mA, in case of control by current
44 =	0…10 V Feedback, independent from the use of 3u or 3i

PAM24-112 - Non-Spring Return Wiring

Modulating

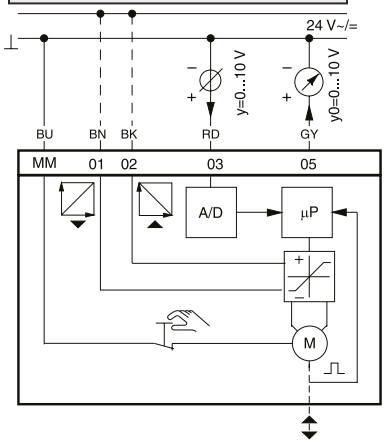

Floating (3pt)

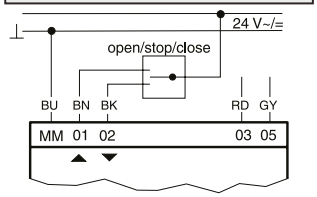

On/Off (2pt)

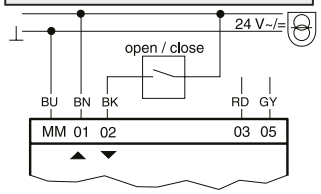

BU blue
BN brown
BK black
RD red
GY grey

DIP Switches

Running Time per mm	Swith Coding	Running Time for 8 mm of Stroke	Running Time for 20 mm of Stroke
7.5 s Default Setting for SS PIC Valve	1 2 3 ON OFF Run Time - Switch (1) Characteristic - Switches (2) & (3)	60 s ± 2	150 s ± 5
15 s	1 2 3 ON OFF Factory Default Settings Run Time - Switch (1) Characteristic - Switches (2) & (3)	120 s ± 4	300 s ± 10

ANSI 125/150 Dimensions — 2-1/2" - 12"

Simple Set Max Dimensions with PAM24-112 Actuator — 2-1/2" - 3"													
MODEL #	Connection		Flow Range	Please reference the illustration									
				L		H		H1		D		Weight	
x=Flow in GPM	in.	mm	GPM	in.	mm	in.	mm	in.	mm	in.	mm	lb	kg
SSM-250-A-L-x	2-1/2	65	19.27 - 110.06	10.87	276	3.50	89	15.50	394	7.01	178	35	16
SSM-250-A-H-x	2-1/2	65	26.21 - 154.11	10.87	276	3.50	89	15.50	394	7.01	178	35	16
SSM-3-A-L-x	3	80	25.53 - 149.78	11.73	298	3.74	95	16.35	415	7.52	191	55	25
SSM-3-A-H-x	3	80	30.92 - 189.47	11.73	298	3.74	95	16.35	415	7.52	191	55	25

Simple Set Max Dimensions with GA(S) Actuators — 2-1/2" - 12"													
MODEL #	Connection		Flow Range	Please reference the illustration									
				L		H		H1		D		Weight	
x=Flow in GPM	in.	mm	GPM	in.	mm	in.	mm	in.	mm	in.	mm	lb	kg
SSM-250-A-L-x	2-1/2	65	19.27 - 110.06	10.87	276	3.50	89	19.12	486	7.01	178	41	19
SSM-250-A-H-x	2-1/2	65	26.21 - 154.11	10.87	276	3.50	89	19.12	486	7.01	178	41	19
SSM-3-A-L-x	3	80	25.53 - 149.78	11.73	298	3.74	95	19.98	507	7.52	191	61	28
SSM-3-A-H-x	3	80	30.92 - 189.47	11.73	298	3.74	95	19.98	507	7.52	191	61	28
SSM-4-A-L-x	4	100	53.41-299.41	13.86	352	4.49	114	24.52	623	9.02	229	123	56
SSM-4-A-H-x	4	100	64.99-396.54	13.86	352	4.49	114	24.52	623	9.02	229	123	56
SSM-5-A-L-x	5	125	81.45-484.32	15.75	400	4.92	125	25.58	650	10.00	254	171	78
SSM-5-A-H-x	5	125	101.26-594.37	15.75	400	4.92	125	25.58	650	10.00	254	171	78
SSM-6-A-L-x	6	150	112.71-651.59	17.76	451	5.47	139	27.26	692	10.98	279	241	109
SSM-6-A-H-x	6	150	140.89-858.56	17.76	451	5.47	139	27.26	692	10.98	279	241	109
SSM-8-A-L-x	8	200	418-925	23.62	600	8.23	209	27.38	695	14.96	380	386	175
SSM-8-A-H-x	8	200	572-1233	23.62	600	8.23	209	27.38	695	14.96	380	386	175
SSM-10-A-L-x	10	250	837-2091	28.74	730	9.02	229	33.44	849	17.48	444	677	307
SSM-10-A-H-x	10	250	1079-2642	28.74	730	9.02	229	33.44	849	17.48	444	677	307
SSM-12-A-L-x	12	300	837-2091	33.46	850	10.98	279	33.44	849	20.47	520	1036	470
SSM-12-A-H-x	12	300	1079-2642	33.46	850	10.98	279	33.44	849	20.47	520	1036	470

Allow 3.5" clearance for actuator removal.

Weights shown are for valve/actuator assemblies
Add 3.2 lbs. (1.5 kg) for spring return actuator

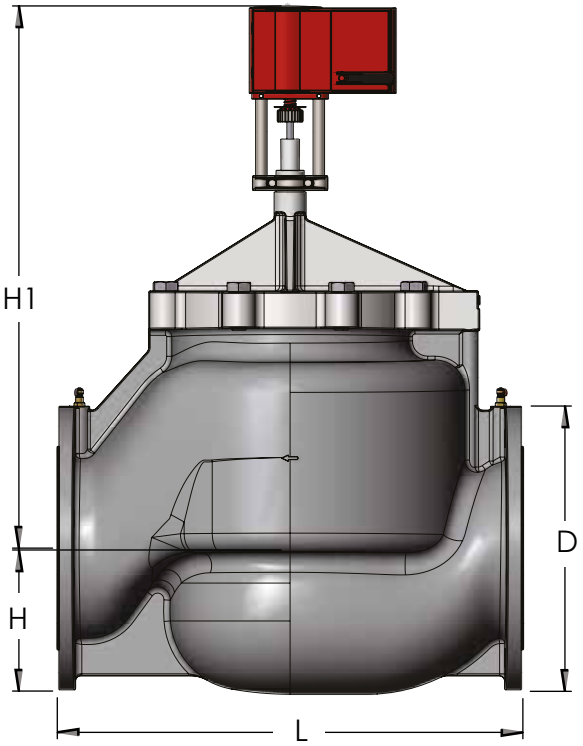

ANSI 250/300 Dimensions — 2-1/2" - 12"

Simple Set Max Dimension with PAM24-112 Actuator — 2-1/2" - 3"

MODEL #	Connection		Flow Range	Please reference the illustration											
				L1		W		H		H1		D		Weight	
X=Flow in GPM	in.	mm	GPM	in.	mm	in.	mm	in.	mm	in.	mm	in.	mm	lb	kg
SSM-250-A250-L-X	2-1/2	65	19.27 - 110.06	11.50	292	7.51	191	3.74	95	19.29	490	7.52	191	58.0	26
SSM-250-A250-H-X	2-1/2	65	26.21 - 154.11	11.50	292	7.51	191	3.74	95	19.29	490	7.52	191	58.0	26
SSM-3-A250-L-X	3	80	25.53 - 149.78	12.52	318	8.34	212	4.13	105	20.51	521	8.27	210	82.2	37
SSM-3-A250-H-X	3	80	30.92 - 189.47	12.52	318	8.34	212	4.13	105	20.51	521	8.27	210	82.2	37

Simple Set Max Dimension with GA(S) Actuators — 2-1/2" - 12"

MODEL #	Connection		Flow Range	Please reference the illustration											
				L1		W		H		H1		D		Weight	
X=Flow in GPM	in.	mm	GPM	in.	mm	in.	mm	in.	mm	in.	mm	in.	mm	lb	kg
SSM-250-A250-L-X	2-1/2	65	19.27 - 110.06	11.50	292	7.51	191	3.74	95	22.91	582	7.52	191	64.0	29
SSM-250-A250-H-X	2-1/2	65	26.21 - 154.11	11.50	292	7.51	191	3.74	95	22.91	582	7.52	191	64.0	29
SSM-3-A250-L-X	3	80	25.53 - 149.78	12.52	318	8.34	212	4.13	105	24.13	613	8.27	210	88.2	40
SSM-3-A250-H-X	3	80	30.92 - 189.47	12.52	318	8.34	212	4.13	105	24.13	613	8.27	210	88.2	40
SSM-4-A300-L-X	4	100	53.41 - 299.41	14.41	366	10.79	274	5.00	127	29.57	751	10.00	254	167.6	76
SSM-4-A300-H-X	4	100	64.99 - 396.40	14.41	366	10.79	274	5.00	127	29.57	751	10.00	254	167.6	76
SSM-5-A250-L-X	5	125	81.45 - 484.29	16.61	422	12.28	312	5.51	140	31.06	789	10.91	277	231.5	105
SSM-5-A250-H-X	5	125	101.26 - 594.37	16.61	422	12.28	312	5.51	140	31.06	789	10.91	277	231.5	105
SSM-6-A250-L-X	6	150	112.71 - 651.59	17.76	473	14.37	365	6.34	161	33.62	854	12.52	318	319.7	145
SSM-6-A250-H-X	6	150	140.89 - 858.56	17.76	473	14.37	365	6.34	161	33.62	854	12.52	318	319.7	145
SSM-8-A300-L-X	8	200	418-925	23.62	600	18.58	472	8.35	212	35.75	908	14.96	380	392.4	178
SSM-8-A300-H-X	8	200	572-1233	23.62	600	18.58	472	8.35	212	35.75	908	14.96	380	392.4	178
SSM-10-A300-L-X	10	250	837-2091	28.74	730	21.69	551	9.02	229	39.92	1014	17.48	444	685.6	311
SSM-10-A300-H-X	10	250	1079-2642	28.74	730	21.69	551	9.02	229	39.92	1014	17.48	444	685.6	311
SSM-12-A300-L-X	12	300	837-2091	33.46	850	28.39	721	10.98	279	41.89	1064	20.47	520	1047.2	475
SSM-12-A300-H-X	12	300	1079-2642	33.46	850	28.39	721	10.98	279	41.89	1064	20.47	520	1047.2	475

Allow 3.5" clearance for actuator removal.

Weights shown are for valve/actuator assemblies
Add 3.2 lbs. (1.5 kg) for spring return actuator

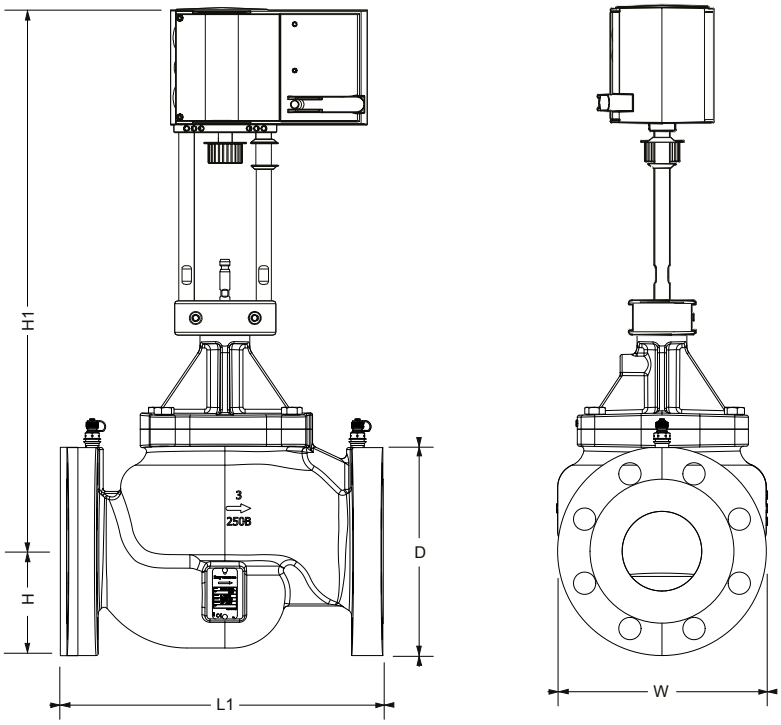

ANSI 125/150 Flow Rate Charts — 2-1/2" - 12"

2-1/2"		Low Flow Rates		
Model Number	Pre-Set	Min. PSI	Flow m³/h	Flow GPM
SSM-250-A-L-19	0.6	2.18	4.4	19.27
SSM-250-A-L-24	0.8	2.18	5.6	24.47
SSM-250-A-L-29	1.0	2.18	6.6	29.25
SSM-250-A-L-34	1.2	2.31	7.7	33.73
SSM-250-A-L-38	1.4	2.41	8.6	38.02
SSM-250-A-L-42	1.6	2.49	9.6	42.21
SSM-250-A-L-46	1.8	2.55	10.5	46.39
SSM-250-A-L-51	2.0	2.61	11.5	50.63
SSM-250-A-L-55	2.2	2.66	12.5	55.03
SSM-250-A-L-60	2.4	2.7	13.5	59.64
SSM-250-A-L-65	2.6	2.76	14.7	64.52
SSM-250-A-L-70	2.8	2.82	15.8	69.73
SSM-250-A-L-75	3.0	2.9	17.1	75.32
SSM-250-A-L-81	3.2	3	18.5	81.33
SSM-250-A-L-88	3.4	3.11	19.9	87.78
SSM-250-A-L-95	3.6	3.26	21.5	94.71
SSM-250-A-L-102	3.8	3.42	23.2	102.13
SSM-250-A-L-110	4.0	3.59	25.0	110.06

2-1/2"		High Flow Rates		
Model Number	Pre-Set	Min. PSI	Flow m³/h	Flow GPM
SSM-250-A-H-26	0.6	4.35	6.0	26.21
SSM-250-A-H-33	0.8	4.35	7.6	33.41
SSM-250-A-H-40	1.0	4.35	9.1	40.09
SSM-250-A-H-46	1.2	4.51	10.5	46.42
SSM-250-A-H-53	1.4	4.6	11.9	52.52
SSM-250-A-H-59	1.6	4.64	13.3	58.52
SSM-250-A-H-65	1.8	4.65	14.7	64.53
SSM-250-A-H-71	2.0	4.64	16.0	70.66
SSM-250-A-H-77	2.2	4.64	17.5	76.99
SSM-250-A-H-84	2.4	4.67	19.0	83.63
SSM-250-A-H-91	2.6	4.74	20.6	90.63
SSM-250-A-H-98	2.8	4.87	22.3	98.07
SSM-250-A-H-106	3.0	5.09	24.1	105.99
SSM-250-A-H-114	3.2	5.4	26.0	114.45
SSM-250-A-H-123	3.4	5.81	28.0	123.47
SSM-250-A-H-133	3.6	6.36	30.2	133.08
SSM-250-A-H-143	3.8	7.06	32.5	143.29
SSM-250-A-H-154	4.0	8.01	35.0	154.11

3"		Low Flow Rates		
Model Number	Pre-Set	Min. PSI	Flow m³/h	Flow GPM
SSM-3-A-L-24	0.6	2.32	5.3	25.53
SSM-3-A-L-30	0.8	2.32	6.9	30.21
SSM-3-A-L-36	1.0	2.33	8.3	36.48
SSM-3-A-L-42	1.2	2.41	9.6	42.44
SSM-3-A-L-48	1.4	2.47	10.9	48.19
SSM-3-A-L-54	1.6	2.52	12.2	53.83
SSM-3-A-L-59	1.8	2.57	13.5	59.46
SSM-3-A-L-65	2.0	2.61	14.8	65.19
SSM-3-A-L-71	2.2	2.65	16.2	71.11
SSM-3-A-L-77	2.4	2.7	17.6	77.32
SSM-3-A-L-84	2.6	2.75	19.1	83.93
SSM-3-A-L-91	2.8	2.82	20.7	91.04
SSM-3-A-L-99	3.0	2.9	22.4	98.74
SSM-3-A-L-107	3.2	3	24.3	107.15
SSM-3-A-L-116	3.4	3.13	26.4	116.35
SSM-3-A-L-126	3.6	3.28	28.7	126.46
SSM-3-A-L-138	3.8	3.44	31.2	137.57
SSM-3-A-L-150	4.0	3.61	34.0	149.78

3"		High Flow Rates		
Model Number	Pre-Set	Min. PSI	Flow m³/h	Flow GPM
SSM-3-A-H-31	0.6	3.34	7.0	30.92
SSM-3-A-H-40	0.8	3.34	9.0	39.83
SSM-3-A-H-48	1.0	3.34	11.0	48.23
SSM-3-A-H-56	1.2	3.43	12.8	56.23
SSM-3-A-H-64	1.4	3.49	14.5	63.94
SSM-3-A-H-71	1.6	3.53	16.2	71.48
SSM-3-A-H-79	1.8	3.57	18.0	78.96
SSM-3-A-H-86	2.0	3.61	19.6	86.49
SSM-3-A-H-94	2.2	3.68	21.4	94.19
SSM-3-A-H-102	2.4	3.77	23.2	102.17
SSM-3-A-H-111	2.6	3.91	25.1	110.53
SSM-3-A-H-119	2.8	4.11	27.1	119.40
SSM-3-A-H-129	3.0	4.39	29.3	128.88
SSM-3-A-H-139	3.2	4.75	31.6	139.09
SSM-3-A-H-150	3.4	5.19	34.1	150.15
SSM-3-A-H-162	3.6	5.73	36.8	162.15
SSM-3-A-H-175	3.8	6.39	39.8	175.22
SSM-3-A-H-189	4.0	7.19	43.0	189.47

4"		Low Flow Rates		
Model Number	Pre-Set	Min. PSI	Flow m³/h	Flow GPM
SSM-4-A-L-53	0.6	2.75	12.1	53.41
SSM-4-A-L-67	0.8	2.83	15.3	67.32
SSM-4-A-L-80	1.0	2.9	18.1	79.88
SSM-4-A-L-91	1.2	2.96	20.8	91.36
SSM-4-A-L-102	1.4	3.02	23.2	102.06
SSM-4-A-L-112	1.6	3.08	25.5	112.26
SSM-4-A-L-122	1.8	3.13	27.8	122.24
SSM-4-A-L-132	2.0	3.19	30.0	132.30
SSM-4-A-L-143	2.2	3.25	32.4	142.71
SSM-4-A-L-154	2.4	3.32	34.9	153.75
SSM-4-A-L-166	2.6	3.4	37.6	165.73
SSM-4-A-L-179	2.8	3.5	40.6	178.91
SSM-4-A-L-193	3.0	3.63	44.0	193.59
SSM-4-A-L-210	3.2	3.78	47.7	210.05
SSM-4-A-L-228	3.4	3.98	51.9	228.58
SSM-4-A-L-249	3.6	4.25	56.7	249.46
SSM-4-A-L-273	3.8	4.6	62.0	272.98
SSM-4-A-L-299	4.0	5.08	68.0	299.41

4"		High Flow Rates		
Model Number	Pre-Set	Min. PSI	Flow m³/h	Flow GPM
SSM-4-A-H-65	0.6	4.14	14.8	64.99
SSM-4-A-H-83	0.8	4.24	18.9	83.15
SSM-4-A-H-99	1.0	4.35	22.6	99.48
SSM-4-A-H-114	1.2	4.48	26.0	114.37
SSM-4-A-H-128	1.4	4.61	29.1	128.22
SSM-4-A-H-141	1.6	4.75	32.1	141.44
SSM-4-A-H-154	1.8	4.91	35.1	154.42
SSM-4-A-H-168	2.0	5.08	38.1	167.57
SSM-4-A-H-181	2.2	5.27	41.2	181.29
SSM-4-A-H-196	2.4	5.5	44.5	195.97
SSM-4-A-H-212	2.6	2.6	48.2	212.03
SSM-4-A-H-230	2.8	6.11	52.2	229.85
SSM-4-A-H-250	3.0	6.52	56.7	249.84
SSM-4-A-H-272	3.2	7.05	61.9	272.41
SSM-4-A-H-298	3.4	7.7	67.7	297.94
SSM-4-A-H-327	3.6	8.51	74.2	326.85
SSM-4-A-H-360	3.8	9.56	81.7	359.54
SSM-4-A-H-396	4.0	10.87	90.0	396.40

5"		Low Flow Rates		
Model Number	Pre-Set	Min. PSI	Flow m³/h	Flow GPM
SSM-5-A-L-81	0.6	2.32	18.5	81.45
SSM-5-A-L-104	0.8	2.32	23.6	103.71
SSM-5-A-L-125	1.0	2.32	28.5	125.48
SSM-5-A-L-147	1.2	2.39	33.3	146.69
SSM-5-A-L-167	1.4	2.46	38.0	167.35
SSM-5-A-L-188	1.6	2.51	42.6	187.50
SSM-5-A-L-207	1.8	2.56	47.1	207.24
SSM-5-A-L-227	2.0	2.61	51.5	226.74
SSM-5-A-L-246	2.2	2.67	55.9	246.21
SSM-5-A-L-266	2.4	2.73	60.4	265.94
SSM-5-A-L-286	2.6	2.81	65.0	286.24
SSM-5-A-L-308	2.8	2.91	69.8	307.51
SSM-5-A-L-330	3.0	3.05	75.0	330.20
SSM-5-A-L-355	3.2	3.23	80.6	354.80
SSM-5-A-L-382	3.4	3.48	86.7	381.86
SSM-5-A-L-412	3.6	3.83	93.6	412.01
SSM-5-A-L-446	3.8	4.34	101.3	445.91
SSM-5-A-L-484	4.0	5.08	110.0	484.29

5"		High Flow Rates		
Model Number	Pre-Set	Min. PSI	Flow m³/h	Flow GPM
SSM-5-A-H-101	0.6	3.92	23.0	101.26
SSM-5-A-H-132	0.8	3.92	29.9	131.74
SSM-5-A-H-161	1.0	3.92	36.5	160.70
SSM-5-A-H-188	1.2	3.99	42.8	188.26
SSM-5-A-H-215	1.4	4.05	48.7	214.59
SSM-5-A-H-240	1.6	4.1	54.5	239.88
SSM-5-A-H-264	1.8	4.15	60.0	264.38
SSM-5-A-H-288	2.0	4.21	65.5	288.38
SSM-5-A-H-312	2.2	4.27	70.9	312.20
SSM-5-A-H-336	2.4	4.35	76.4	336.23
SSM-5-A-H-361	2.6	4.46	82.0	360.86
SSM-5-A-H-387	2.8	4.6	87.8	386.57
SSM-5-A-H-414	3.0	7.79	94.0	413.86
SSM-5-A-H-443	3.2	5.05	100.7	443.26
SSM-5-A-H-475	3.4	5.41	108.0	475.36
SSM-5-A-H-511	3.6	5.92	116.0	510.79
SSM-5-A-H-550	3.8	6.65	125.0	550.22
SSM-5-A-H-594	4.0	7.69	135.0	594.37

See Website for Specific Flow Rate Settings Calculator

ANSI 125/150 Flow Rate Charts — 2-1/2" - 12"

6"		Low Flow Rates		
Model Number	Pre-Set	Min. PSI	Flow m³/h	Flow GPM
SSM-6-A-L-113	0.6	3.05	25.6	112.71
SSM-6-A-L-143	0.8	3.05	32.6	143.42
SSM-6-A-L-173	1.0	3.05	39.2	172.59
SSM-6-A-L-201	1.2	3.05	45.6	200.66
SSM-6-A-L-228	1.4	3.05	51.8	228.06
SSM-6-A-L-255	1.6	3.05	58.0	255.18
SSM-6-A-L-282	1.8	3.05	64.1	282.37
SSM-6-A-L-310	2.0	3.19	70.4	309.95
SSM-6-A-L-338	2.2	3.39	76.8	338.20
SSM-6-A-L-367	2.4	3.61	83.4	367.36
SSM-6-A-L-398	2.6	3.86	90.3	397.65
SSM-6-A-L-429	2.8	4.11	97.5	429.24
SSM-6-A-L-462	3.0	4.35	105.0	462.28
SSM-6-A-L-497	3.2	4.58	112.9	496.87
SSM-6-A-L-533	3.4	4.77	121.1	533.07
SSM-6-A-L-571	3.6	4.93	129.7	570.94
SSM-6-A-L-610	3.8	5.03	138.7	610.46
SSM-6-A-L-652	4.0	5.08	148.0	651.59

6"		High Flow Rates		
Model Number	Pre-Set	Min. PSI	Flow m³/h	Flow GPM
SSM-6-A-H-141	0.6	4.79	32.0	140.89
SSM-6-A-H-182	0.8	4.79	41.3	181.96
SSM-6-A-H-220	1.0	4.79	50.0	220.14
SSM-6-A-H-256	1.2	4.79	58.2	256.16
SSM-6-A-H-291	1.4	4.79	66.0	290.70
SSM-6-A-H-324	1.6	4.79	73.7	324.42
SSM-6-A-H-358	1.8	4.79	81.3	357.94
SSM-6-A-H-392	2.0	4.93	89.0	391.86
SSM-6-A-H-427	2.2	5.16	96.9	426.71
SSM-6-A-H-463	2.4	5.46	105.2	463.04
SSM-6-A-H-501	2.6	5.82	113.9	501.33
SSM-6-A-H-542	2.8	6.23	123.1	542.04
SSM-6-A-H-586	3.0	6.68	133.0	585.59
SSM-6-A-H-632	3.2	7.14	143.6	632.37
SSM-6-A-H-683	3.4	7.69	155.1	682.75
SSM-6-A-H-737	3.6	8.23	167.4	737.05
SSM-6-A-H-796	3.8	8.81	180.7	795.57
SSM-6-A-H-859	4.0	9.44	195.0	858.56

8"		Low Flow Rates		
Model Number	Pre-Set	Min. PSI	Flow m³/h	Flow GPM
SSM-8-A-L-419	1	1.6	95.2	418
SSM-8-A-L-435	1.2	1.7	98.8	435
SSM-8-A-L-460	1.4	1.8	104.5	460
SSM-8-A-L-485	1.6	1.9	110.2	485
SSM-8-A-L-515	1.8	2.1	117.0	515
SSM-8-A-L-545	2	2.3	123.8	545
SSM-8-A-L-575	2.2	2.5	130.6	575
SSM-8-A-L-610	2.4	2.7	138.6	610
SSM-8-A-L-640	2.6	2.9	145.4	640
SSM-8-A-L-680	2.8	3.2	154.4	680
SSM-8-A-L-720	3	3.4	163.5	720
SSM-8-A-L-760	3.2	3.7	172.6	760
SSM-8-A-L-795	3.4	3.9	180.6	795
SSM-8-A-L-835	3.6	4.2	189.7	835
SSM-8-A-L-875	3.8	4.4	198.7	875
SSM-8 -A-L-924	4	4.6	209.9	925

8"		High Flow Rates		
Model Number	Pre-Set	Min. PSI	Flow m³/h	Flow GPM
SSM-8-A-H-573	1	4.5	130.1	572
SSM-8-A-H-598	1.2	5	135.8	598
SSM-8-A-H-630	1.4	5	143.1	630
SSM-8-A-H-664	1.6	5	150.8	664
SSM-8-A-H-702	1.8	5	159.4	702
SSM-8-A-H-739	2	6	167.9	739
SSM-8-A-H-779	2.2	6	176.9	779
SSM-8-A-H-823	2.4	7	186.9	823
SSM-8-A-H-865	2.6	7	196.5	865
SSM-8-A-H-910	2.8	8	206.7	910
SSM-8-A-H-957	3	9	217.4	957
SSM-8-A-H-1008	3.2	9	228.9	1008
SSM-8-A-H-1058	3.4	10	240.3	1058
SSM-8-A-H-1109	3.6	10	251.9	1109
SSM-8-A-H-1164	3.8	11	264.4	1164
SSM-8-A-H-1232	4	11	279.8	1233

10"		Low Flow Rates		
Model Number	Pre-Set	Min. PSI	Flow m³/h	Flow GPM
SSM-10-A-L-837	1	1.5	190.1	837
SSM-10-A-L-900	1.2	1.5	204.4	900
SSM-10-A-L-960	1.4	1.6	218.0	960
SSM-10-A-L-1020	1.6	1.7	231.7	1020
SSM-10-A-L-1075	1.8	1.9	244.2	1075
SSM-10-A-L-1135	2	2.1	257.8	1135
SSM-10-A-L-1195	2.2	2.4	271.4	1195
SSM-10-A-L-1255	2.4	2.6	285.0	1255
SSM-10-A-L-1325	2.6	2.9	300.9	1325
SSM-10-A-L-1400	2.8	3.3	318.0	1400
SSM-10-A-L-1480	3	3.6	336.1	1480
SSM-10-A-L-1570	3.2	3.9	356.6	1570
SSM-10-A-L-1680	3.4	3.4	381.6	1680
SSM-10-A-L-1795	3.6	4.5	407.7	1795
SSM-10-A-L-1930	3.8	4.8	438.4	1930
SSM-10-A-L-2091	4	5.1	474.9	2091

10"		High Flow Rates		
Model Number	Pre-Set	Min. PSI	Flow m³/h	Flow GPM
SSM-10-A-H-1079	1	2.18	245.1	1079
SSM-10-A-H-1118	1.2	2.3	253.9	1118
SSM-10-A-H-1178	1.4	2.5	267.6	1178
SSM-10-A-H-1246	1.6	2.8	283.0	1246
SSM-10-A-H-1330	1.8	3.1	302.1	1330
SSM-10-A-H-1420	2	3.6	322.5	1420
SSM-10-A-H-1515	2.2	4.1	344.1	1515
SSM-10-A-H-1620	2.4	4.6	367.9	1620
SSM-10-A-H-1730	2.6	5.2	392.9	1730
SSM-10-A-H-1845	2.8	5.8	419.1	1845
SSM-10-A-H-1965	3	6.4	446.3	1965
SSM-10-A-H-2090	3.2	7.1	474.7	2090
SSM-10-A-H-2220	3.4	7.8	504.2	2220
SSM-10-A-H-2355	3.6	8.6	534.9	2355
SSM-10-A-H-2490	3.8	9.3	565.5	2490
SSM-10-A-H-2641	4	10.2	599.8	2642

12"		Low Flow Rates		
Model Number	Pre-Set	Min. PSI	Flow m³/h	Flow GPM
SSM-12-A-L-837	1	1.5	190.1	837
SSM-12-A-L-895	1.2	1.5	203.3	895
SSM-12-A-L-955	1.4	1.6	216.9	955
SSM-12-A-L-1015	1.6	1.7	230.5	1015
SSM-12-A-L-1075	1.8	1.8	244.2	1075
SSM-12-A-L-1130	2	2.1	256.7	1130
SSM-12-A-L-1195	2.2	2.4	271.4	1195
SSM-12-A-L-1255	2.4	2.6	285.0	1255
SSM-12-A-L-1325	2.6	2.9	300.9	1325
SSM-12-A-L-1400	2.8	3.3	318.0	1400
SSM-12-A-L-1480	3	3.6	336.1	1480
SSM-12-A-L-1570	3.2	3.2	356.6	1570
SSM-12-A-L-1680	3.4	4.2	381.6	1680
SSM-12-A-L-1795	3.6	4.5	407.7	1795
SSM-12-A-L-1930	3.8	4.8	438.4	1930
SSM-12-A-L-2091	4	5.1	474.9	2091

12"		High Flow Rates		
Model Number	Pre-Set	Min. PSI	Flow m³/h	Flow GPM
SSM-12-A-H-1079	1	2.2	245.1	1079
SSM-12-A-H-1118	1.2	2.3	253.9	1118
SSM-12-A-H-1178	1.4	2.5	267.6	1178
SSM-12-A-H-1248	1.6	2.8	283.5	1248
SSM-12-A-H-1330	1.8	3.1	302.1	1330
SSM-12-A-H-1418	2	3.6	322.1	1418
SSM-12-A-H-1515	2.2	4.1	344.1	1515
SSM-12-A-H-1618	2.4	4.6	367.5	1618
SSM-12-A-H-1730	2.6	5.2	392.9	1730
SSM-12-A-H-1847	2.8	5.8	419.5	1847
SSM-12-A-H-1969	3	6.5	447.2	1969
SSM-12-A-H-2090	3.2	7.1	474.7	2090
SSM-12-A-H-2225	3.4	7.9	505.4	2225
SSM-12-A-H-2350	3.6	8.6	533.7	2350
SSM-12-A-H-2490	3.8	9.3	565.5	2490
SSM-12-A-H-2641	4	10.2	599.8	2642

See Website for Specific Flow Rate Settings Calculator

ANSI 250/300 Flow Rate Charts — 2-1/2" - 12"

2-1/2"		Low Flow Rates		
Model Number	Pre-Set	Min. PSI	Flow m³/h	Flow GPM
SSM-250-A250-L-19	0.6	2.18	4.4	19.27
SSM-250-A250-L-24	0.8	2.18	5.6	24.47
SSM-250-A250-L-29	1.0	2.18	6.6	29.25
SSM-250-A250-L-34	1.2	2.31	7.7	33.73
SSM-250-A250-L-38	1.4	2.41	8.6	38.02
SSM-250-A250-L-42	1.6	2.49	9.6	42.21
SSM-250-A250-L-46	1.8	2.55	10.5	46.39
SSM-250-A250-L-51	2.0	2.61	11.5	50.63
SSM-250-A250-L-55	2.2	2.66	12.5	55.03
SSM-250-A250-L-60	2.4	2.70	13.5	59.64
SSM-250-A250-L-65	2.6	2.76	14.7	64.52
SSM-250-A250-L-70	2.8	2.82	15.8	69.73
SSM-250-A250-L-75	3.0	2.90	17.1	75.32
SSM-250-A250-L-81	3.2	3.00	18.5	81.33
SSM-250-A250-L-88	3.4	3.11	19.9	87.78
SSM-250-A250-L-95	3.6	3.26	21.5	94.71
SSM-250-A250-L-102	3.8	3.42	23.2	102.13
SSM-250-A250-L-110	4.0	3.59	25.0	110.06

2-1/2"		High Flow Rates		
Model Number	Pre-Set	Min. PSI	Flow m³/h	Flow GPM
SSM-250-A250-H-26	0.6	4.35	6.0	26.21
SSM-250-A250-H-33	0.8	4.35	7.6	33.41
SSM-250-A250-H-40	1.0	4.35	9.1	40.09
SSM-250-A250-H-46	1.2	4.51	10.5	46.42
SSM-250-A250-H-53	1.4	4.60	11.9	52.52
SSM-250-A250-H-59	1.6	4.64	13.3	58.52
SSM-250-A250-H-65	1.8	4.65	14.7	64.53
SSM-250-A250-H-71	2.0	4.64	16.0	70.66
SSM-250-A250-H-77	2.2	4.64	17.5	76.99
SSM-250-A250-H-84	2.4	4.67	19.0	83.63
SSM-250-A250-H-91	2.6	4.74	20.6	90.63
SSM-250-A250-H-98	2.8	4.87	22.3	98.07
SSM-250-A250-H-106	3.0	5.09	24.1	105.99
SSM-250-A250-H-114	3.2	5.40	26.0	114.45
SSM-250-A250-H-123	3.4	5.81	28.0	123.47
SSM-250-A250-H-133	3.6	6.36	30.2	133.08
SSM-250-A250-H-143	3.8	7.06	32.5	143.29
SSM-250-A250-H-154	4.0	8.01	35.0	154.11

3"		Low Flow Rates		
Model Number	Pre-Set	Min. PSI	Flow m³/h	Flow GPM
SSM-3-A250-L-24	0.6	2.32	5.3	25.53
SSM-3-A250-L-30	0.8	2.32	6.9	30.21
SSM-3-A250-L-36	1.0	2.33	8.3	36.48
SSM-3-A250-L-42	1.2	2.41	9.6	42.44
SSM-3-A250-L-48	1.4	2.47	10.9	48.19
SSM-3-A250-L-54	1.6	2.52	12.2	53.83
SSM-3-A250-L-59	1.8	2.57	13.5	59.46
SSM-3-A250-L-65	2.0	2.61	14.8	65.19
SSM-3-A250-L-71	2.2	2.65	16.2	71.11
SSM-3-A250-L-77	2.4	2.70	17.6	77.32
SSM-3-A250-L-84	2.6	2.75	19.1	83.93
SSM-3-A250-L-91	2.8	2.82	20.7	91.04
SSM-3-A250-L-99	3.0	2.90	22.4	98.74
SSM-3-A250-L-107	3.2	3.00	24.3	107.15
SSM-3-A250-L-116	3.4	3.13	26.4	116.35
SSM-3-A250-L-126	3.6	3.28	28.7	126.46
SSM-3-A250-L-138	3.8	3.44	31.2	137.57
SSM-3-A250-L-150	4.0	3.61	34.0	149.78

3"		High Flow Rates		
Model Number	Pre-Set	Min. PSI	Flow m³/h	Flow GPM
SSM-3-A250-H-31	0.6	3.34	7.0	30.92
SSM-3-A250-H-40	0.8	3.34	9.0	39.83
SSM-3-A250-H-48	1.0	3.34	11.0	48.23
SSM-3-A250-H-56	1.2	3.43	12.8	56.23
SSM-3-A250-H-64	1.4	3.49	14.5	63.94
SSM-3-A250-H-71	1.6	3.53	16.2	71.48
SSM-3-A250-H-79	1.8	3.57	18.0	78.96
SSM-3-A250-H-86	2.0	3.61	19.6	86.49
SSM-3-A250-H-94	2.2	3.68	21.4	94.19
SSM-3-A250-H-102	2.4	3.77	23.2	102.17
SSM-3-A250-H-111	2.6	3.91	25.1	110.53
SSM-3-A250-H-119	2.8	4.11	27.1	119.40
SSM-3-A250-H-129	3.0	4.39	29.3	128.88
SSM-3-A250-H-139	3.2	4.75	31.6	139.09
SSM-3-A250-H-150	3.4	5.19	34.1	150.15
SSM-3-A250-H-162	3.6	5.73	36.8	162.15
SSM-3-A250-H-175	3.8	6.39	39.8	175.22
SSM-3-A250-H-189	4.0	7.19	43.0	189.47

4"		Low Flow Rates		
Model Number	Pre-Set	Min. PSI	Flow m³/h	Flow GPM
SSM-4-A300-L-53	0.6	2.75	12.1	53.41
SSM-4-A300-L-67	0.8	2.83	15.3	67.32
SSM-4-A300-L-80	1.0	2.90	18.1	79.88
SSM-4-A300-L-91	1.2	2.96	20.8	91.36
SSM-4-A300-L-102	1.4	3.02	23.2	102.06
SSM-4-A300-L-112	1.6	3.08	25.5	112.26
SSM-4-A300-L-122	1.8	3.13	27.8	122.24
SSM-4-A300-L-132	2.0	3.19	30.0	132.30
SSM-4-A300-L-143	2.2	3.25	32.4	142.71
SSM-4-A300-L-154	2.4	3.32	34.9	153.75
SSM-4-A300-L-166	2.6	3.40	37.6	165.73
SSM-4-A300-L-179	2.8	3.50	40.6	178.91
SSM-4-A300-L-193	3.0	3.63	44.0	193.59
SSM-4-A300-L-210	3.2	3.78	47.7	210.05
SSM-4-A300-L-228	3.4	3.98	51.9	228.58
SSM-4-A300-L-249	3.6	4.25	56.7	249.46
SSM-4-A300-L-273	3.8	4.60	62.0	272.98
SSM-4-A300-L-299	4.0	5.08	68.0	299.41

4"		High Flow Rates		
Model Number	Pre-Set	Min. PSI	Flow m³/h	Flow GPM
SSM-4-A300-H-65	0.6	4.14	14.8	64.99
SSM-4-A300-H-83	0.8	4.24	18.9	83.15
SSM-4-A300-H-99	1.0	4.35	22.6	99.48
SSM-4-A300-H-114	1.2	4.48	26.0	114.37
SSM-4-A300-H-128	1.4	4.61	29.1	128.22
SSM-4-A300-H-141	1.6	4.75	32.1	141.44
SSM-4-A300-H-154	1.8	4.91	35.1	154.42
SSM-4-A300-H-168	2.0	5.08	38.1	167.57
SSM-4-A300-H-181	2.2	5.27	41.2	181.29
SSM-4-A300-H-196	2.4	5.50	44.5	195.97
SSM-4-A300-H-212	2.6	2.60	48.2	212.03
SSM-4-A300-H-230	2.8	6.11	52.2	229.85
SSM-4-A300-H-250	3.0	6.52	56.7	249.84
SSM-4-A300-H-272	3.2	7.05	61.9	272.41
SSM-4-A300-H-298	3.4	7.70	67.7	297.94
SSM-4-A300-H-327	3.6	8.51	74.2	326.85
SSM-4-A300-H-360	3.8	9.56	81.7	359.54
SSM-4-A300-H-396	4.0	10.87	90.0	396.40

5"		Low Flow Rates		
Model Number	Pre-Set	Min. PSI	Flow m³/h	Flow GPM
SSM-5-A250-L-81	0.6	2.32	18.5	81.45
SSM-5-A250-L-104	0.8	2.32	23.6	103.71
SSM-5-A250-L-125	1.0	2.32	28.5	125.48
SSM-5-A250-L-147	1.2	2.39	33.3	146.69
SSM-5-A250-L-167	1.4	2.46	38.0	167.35
SSM-5-A250-L-188	1.6	2.51	42.6	187.50
SSM-5-A250-L-207	1.8	2.56	47.1	207.24
SSM-5-A250-L-227	2.0	2.61	51.5	226.74
SSM-5-A250-L-246	2.2	2.67	55.9	246.21
SSM-5-A250-L-266	2.4	2.73	60.4	265.94
SSM-5-A250-L-286	2.6	2.81	65.0	286.24
SSM-5-A250-L-308	2.8	2.91	69.8	307.51
SSM-5-A250-L-330	3.0	3.05	75.0	330.20
SSM-5-A250-L-355	3.2	3.23	80.6	354.80
SSM-5-A250-L-382	3.4	3.48	86.7	381.86
SSM-5-A250-L-412	3.6	3.83	93.6	412.01
SSM-5-A250-L-446	3.8	4.34	101.3	445.91
SSM-5-A250-L-484	4.0	5.08	110.0	484.29

5"		High Flow Rates		
Model Number	Pre-Set	Min. PSI	Flow m³/h	Flow GPM
SSM-5-A250-H-101	0.6	3.92	23.0	101.26
SSM-5-A250-H-132	0.8	3.92	29.9	131.74
SSM-5-A250-H-161	1.0	3.92	36.5	160.70
SSM-5-A250-H-188	1.2	3.99	42.8	188.26
SSM-5-A250-H-215	1.4	4.05	48.7	214.59
SSM-5-A250-H-240	1.6	4.10	54.5	239.88
SSM-5-A250-H-264	1.8	4.15	60.0	264.38
SSM-5-A250-H-288	2.0	4.21	65.5	288.38
SSM-5-A250-H-312	2.2	4.27	70.9	312.20
SSM-5-A250-H-336	2.4	4.35	76.4	336.23
SSM-5-A250-H-361	2.6	4.46	82.0	360.86
SSM-5-A250-H-387	2.8	4.60	87.8	386.57
SSM-5-A250-H-414	3.0	7.79	94.0	413.86
SSM-5-A250-H-443	3.2	5.05	100.7	443.26
SSM-5-A250-H-475	3.4	5.41	108.0	475.36
SSM-5-A250-H-511	3.6	5.92	116.0	510.79
SSM-5-A250-H-550	3.8	6.65	125.0	550.22
SSM-5-A250-H-594	4.0	7.69	135.0	594.37

See Website for Specific Flow Rate Settings Calculator

ANSI 250/300 Flow Rate Charts — 2-1/2" - 12"

6"		Low Flow Rates		
Model Number	Pre-Set	Min. PSI	Flow m³/h	Flow GPM
SSM-6-A250-L-113	0.6	3.05	25.6	112.71
SSM-6-A250-L-143	0.8	3.05	32.6	143.42
SSM-6-A250-L-173	1.0	3.05	39.2	172.59
SSM-6-A250-L-201	1.2	3.05	45.6	200.66
SSM-6-A250-L-228	1.4	3.05	51.8	228.06
SSM-6-A250-L-255	1.6	3.05	58.0	255.18
SSM-6-A250-L-282	1.8	3.05	64.1	282.37
SSM-6-A250-L-310	2.0	3.19	70.4	309.95
SSM-6-A250-L-338	2.2	3.39	76.8	338.20
SSM-6-A250-L-367	2.4	3.61	83.4	367.36
SSM-6-A250-L-398	2.6	3.86	90.3	397.65
SSM-6-A250-L-429	2.8	4.11	97.5	429.24
SSM-6-A250-L-462	3.0	4.35	105.0	462.28
SSM-6-A250-L-497	3.2	4.58	112.9	496.87
SSM-6-A250-L-533	3.4	4.77	121.1	533.07
SSM-6-A250-L-571	3.6	4.93	129.7	570.94
SSM-6-A250-L-610	3.8	5.03	138.7	610.46
SSM-6-A250-L-652	4.0	5.08	148.0	651.59

6"		High Flow Rates		
Model Number	Pre-Set	Min. PSI	Flow m³/h	Flow GPM
SSM-6-A250-H-141	0.6	4.79	32.0	140.89
SSM-6-A250-H-182	0.8	4.79	41.3	181.96
SSM-6-A250-H-220	1.0	4.79	50.0	220.14
SSM-6-A250-H-256	1.2	4.79	58.2	256.16
SSM-6-A250-H-291	1.4	4.79	66.0	290.70
SSM-6-A250-H-324	1.6	4.79	73.7	324.42
SSM-6-A250-H-358	1.8	4.79	81.3	357.94
SSM-6-A250-H-392	2.0	4.93	89.0	391.86
SSM-6-A250-H-427	2.2	5.16	96.9	426.71
SSM-6-A250-H-463	2.4	5.46	105.2	463.04
SSM-6-A250-H-501	2.6	5.82	113.9	501.33
SSM-6-A250-H-542	2.8	6.23	123.1	542.04
SSM-6-A250-H-586	3.0	6.68	133.0	585.59
SSM-6-A250-H-632	3.2	7.14	143.6	632.37
SSM-6-A250-H-683	3.4	7.69	155.1	682.75
SSM-6-A250-H-737	3.6	8.23	167.4	737.05
SSM-6-A250-H-796	3.8	8.81	180.7	795.57
SSM-6-A250-H-859	4.0	9.44	195.0	858.56

8"		Low Flow Rates		
Model Number	Pre-Set	Min. PSI	Flow m³/h	Flow GPM
SSM-8-A300-L-419	1.0	1.6	95.2	418
SSM-8-A300-L-435	1.2	1.7	98.8	435
SSM-8-A300-L-460	1.4	1.8	104.5	460
SSM-8-A300-L-485	1.6	1.9	110.2	485
SSM-8-A300-L-515	1.8	2.1	117.0	515
SSM-8-A300-L-545	2.0	2.3	123.8	545
SSM-8-A300-L-575	2.2	2.5	130.6	575
SSM-8-A300-L-610	2.4	2.7	138.6	610
SSM-8-A300-L-640	2.6	2.9	145.4	640
SSM-8-A300-L-680	2.8	3.2	154.4	680
SSM-8-A300-L-720	3.0	3.4	163.5	720
SSM-8-A300-L-760	3.2	3.7	172.6	760
SSM-8-A300-L-795	3.4	3.9	180.6	795
SSM-8-A300-L-835	3.6	4.2	189.7	835
SSM-8-A300-L-875	3.8	4.4	198.7	875
SSM-8 -A300-L-924	4.0	4.6	209.9	925

8"		High Flow Rates		
Model Number	Pre-Set	Min. PSI	Flow m³/h	Flow GPM
SSM-8-A300-H-573	1.0	4.5	130.1	572
SSM-8-A300-H-598	1.2	4.6	135.8	598
SSM-8-A300-H-630	1.4	4.7	143.1	630
SSM-8-A300-H-664	1.6	5.0	150.8	664
SSM-8-A300-H-702	1.8	5.4	159.4	702
SSM-8-A300-H-739	2.0	5.4	167.9	739
SSM-8-A300-H-779	2.2	6.3	176.9	779
SSM-8-A300-H-823	2.4	6.9	186.9	823
SSM-8-A300-H-865	2.6	7.5	196.5	865
SSM-8-A300-H-910	2.8	8.1	206.7	910
SSM-8-A300-H-957	3.0	8.7	217.4	957
SSM-8-A300-H-1008	3.2	9.3	228.9	1008
SSM-8-A300-H-1058	3.4	9.9	240.3	1058
SSM-8-A300-H-1109	3.6	10.4	251.9	1109
SSM-8-A300-H-1164	3.8	10.4	264.4	1164
SSM-8-A300-H-1232	4.0	11.3	279.8	1233

10"		Low Flow Rates		
Model Number	Pre-Set	Min. PSI	Flow m³/h	Flow GPM
SSM-10-A300-L-837	1.0	1.5	190.1	837
SSM-10-A300-L-900	1.2	1.5	204.4	900
SSM-10-A300-L-960	1.4	1.6	218.0	960
SSM-10-A300-L-1020	1.6	1.7	231.7	1020
SSM-10-A300-L-1075	1.8	1.9	244.2	1075
SSM-10-A300-L-1135	2.0	2.1	257.8	1135
SSM-10-A300-L-1195	2.2	2.4	271.4	1195
SSM-10-A300-L-1255	2.4	2.6	285.0	1255
SSM-10-A300-L-1325	2.6	2.9	300.9	1325
SSM-10-A300-L-1400	2.8	3.3	318.0	1400
SSM-10-A300-L-1480	3.0	3.6	336.1	1480
SSM-10-A300-L-1570	3.2	3.9	356.6	1570
SSM-10-A300-L-1680	3.4	3.4	381.6	1680
SSM-10-A300-L-1795	3.6	4.5	407.7	1795
SSM-10-A300-L-1930	3.8	4.8	438.4	1930
SSM-10-A300-L-2091	4.0	5.1	474.9	2091

10"		High Flow Rates		
Model Number	Pre-Set	Min. PSI	Flow m³/h	Flow GPM
SSM-10-A300-H-1079	1.0	2.18	245.1	1079
SSM-10-A300-H-1118	1.2	2.3	253.9	1118
SSM-10-A300-H-1178	1.4	2.5	267.6	1178
SSM-10-A300-H-1246	1.6	2.8	283.0	1246
SSM-10-A300-H-1330	1.8	3.1	302.1	1330
SSM-10-A300-H-1420	2.0	3.6	322.5	1420
SSM-10-A300-H-1515	2.2	4.1	344.1	1515
SSM-10-A300-H-1620	2.4	4.6	367.9	1620
SSM-10-A300-H-1730	2.6	5.2	392.9	1730
SSM-10-A300-H-1845	2.8	5.8	419.1	1845
SSM-10-A300-H-1965	3.0	6.4	446.3	1965
SSM-10-A300-H-2090	3.2	7.1	474.7	2090
SSM-10-A300-H-2220	3.4	7.8	504.2	2220
SSM-10-A300-H-2355	3.6	8.6	534.9	2355
SSM-10-A300-H-2490	3.8	9.3	565.5	2490
SSM-10-A300-H-2641	4.0	10.2	599.8	2642

12"		Low Flow Rates		
Model Number	Pre-Set	Min. PSI	Flow m³/h	Flow GPM
SSM-12-A300-L-837	1.0	1.5	190.1	837
SSM-12-A300-L-895	1.2	1.5	203.3	895
SSM-12-A300-L-955	1.4	1.6	216.9	955
SSM-12-A300-L-1015	1.6	1.7	230.5	1015
SSM-12-A300-L-1075	1.8	1.8	244.2	1075
SSM-12-A300-L-1130	2.0	2.1	256.7	1130
SSM-12-A300-L-1195	2.2	2.4	271.4	1195
SSM-12-A300-L-1255	2.4	2.6	285.0	1255
SSM-12-A300-L-1325	2.6	2.9	300.9	1325
SSM-12-A300-L-1400	2.8	3.3	318.0	1400
SSM-12-A300-L-1480	3.0	3.6	336.1	1480
SSM-12-A300-L-1570	3.2	3.2	356.6	1570
SSM-12-A300-L-1680	3.4	4.2	381.6	1680
SSM-12-A300-L-1795	3.6	4.5	407.7	1795
SSM-12-A300-L-1930	3.8	4.8	438.4	1930
SSM-12-A300-L-2091	4.0	5.1	474.9	2091

12"		High Flow Rates		
Model Number	Pre-Set	Min. PSI	Flow m³/h	Flow GPM
SSM-12-A300-H-1079	1.0	2.2	245.1	1079
SSM-12-A300-H-1118	1.2	2.3	253.9	1118
SSM-12-A300-H-1178	1.4	2.5	267.6	1178
SSM-12-A300-H-1248	1.6	2.8	283.5	1248
SSM-12-A300-H-1330	1.8	3.1	302.1	1330
SSM-12-A300-H-1418	2.0	3.6	322.1	1418
SSM-12-A300-H-1515	2.2	4.1	344.1	1515
SSM-12-A300-H-1618	2.4	4.6	367.5	1618
SSM-12-A300-H-1730	2.6	5.2	392.9	1730
SSM-12-A300-H-1847	2.8	5.8	419.5	1847
SSM-12-A300-H-1969	3.0	6.5	447.2	1969
SSM-12-A300-H-2090	3.2	7.1	474.7	2090
SSM-12-A300-H-2225	3.4	7.9	505.4	2225
SSM-12-A300-H-2350	3.6	8.6	533.7	2350
SSM-12-A300-H-2490	3.8	9.3	565.5	2490
SSM-12-A300-H-2641	4.0	10.2	599.8	2642

See Website for Specific Flow Rate Settings Calculator

Simple Set Max Valve Application Guide

Trapped Air Extraction In Pressure Independent Valves

During the normal operation of hydronic systems, pressure independent valves may trap air in the pressure balancing part of the valve. If the air is not removed, one of the effects is a valve that may pulsate with a mild or violent shaking force. There are simple procedures for removing this trapped air in the Simple Set Max pressure independent valves.

To vent trapped air, the valve needs to be cycled closed, wait 10-15 seconds, and then open it. This exhausts air out of the diaphragm chamber and into the pipe where it can later rise to a high point for extraction. In a building with several valves, it is most convenient to perform this from a central building automation control. We recommend sequentially closing one valve at a time to minimize the disruption to occupants. If the building is not occupied it is acceptable to cycle all of the valves at once as long as there is a method in place to keep the system pressure differential to within the valve differential pressure range.

NOTE - Valve selections should not be larger than pipe size

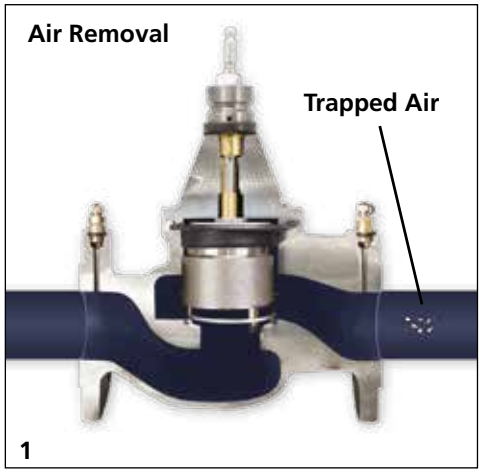

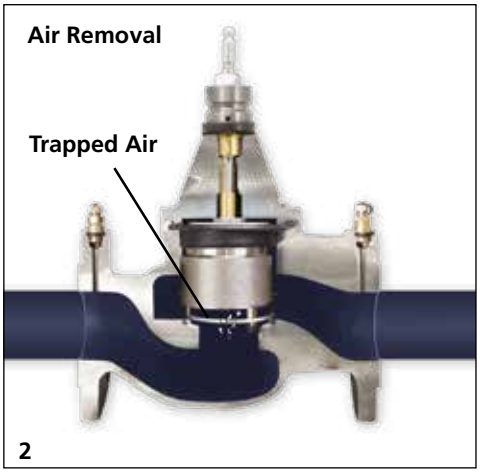

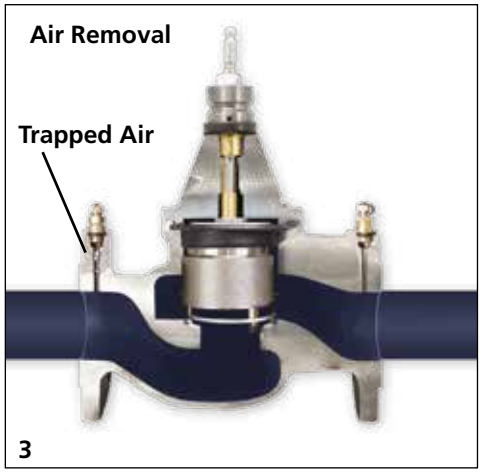

Piping in Parallel
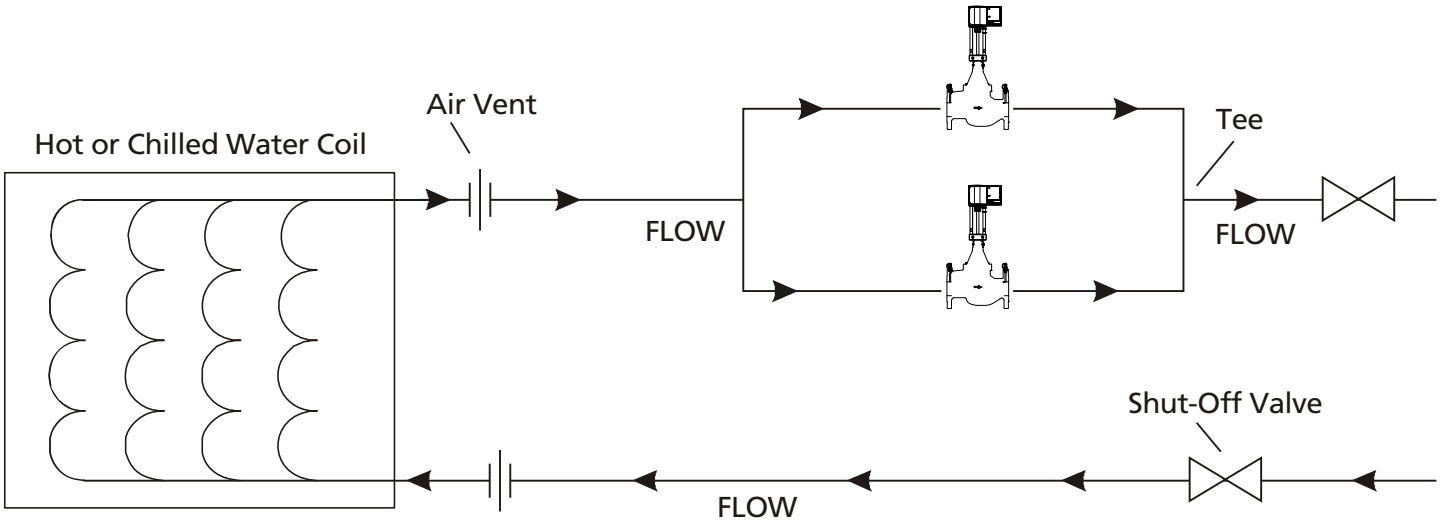
To achieve flows larger than specified valve capacity, it is recommended to connect two valves in parallel leading to a common manifold. The valves should be connected so that they utilize one common control signal in parallel (2-10 VDC) and the two valves will control the flow in an identical pattern. The resulting flow will be double, controlled by an individual valve. The alternative of using a split signal will be less stable, result in less accurate flow and likely feedback signal errors.