Bray Controls Commercial Division
13788 West Road, Suite 200A
Houston, Texas 77041

BCDSales@Bray.com
Phone: 1-888-412-2729
Fax: 1-888-412-2720
www.braycommercialdivision.com

Simple Set Max - Valve Specifications

Technical Specifications - Valve	
Valve Body	2-1/2" – 12"
Service	Hot Water, Chilled Water, 50/50 Glycol Solutions
Cold Working Pressure	2-1/2" thru 6" – ANSI Class 125 8" thru 12" – ANSI Class 150
Media Temp. Range - 2.5" - 5"	32°F to 248°F (0°C to 120°C)
Media Temp. Range - 6" - 12"	32˚F to 230˚F (0˚C to 110˚ C)
Min. Operational ΔP	Refer to Flow Rate Charts in the Simple Set Max Catalog Section
Max. Operational ΔP	116 PSID (800kPa)
Max. Close-Off Pressure	116 PSI (800kPa)
Valve Operation	Push down to close, Normally open
Shut-Off Leakage	<ANSI ClassIV (0.01%)
Flow Rate Range	19.27 to 2642 GPM
Stroke	2.5" & 3" = 0.79" (20mm), 4" & 5" = 1.58" (40mm), 6" & 8"= 1.69" (43mm), 10" & 12" =1.89" (48mm)
Flange Connections	ANSI 125/150
Test Ports	1/4" NPT
MATERIALS	
Body Material	2-1/2" thru 6" – Cast Iron 8" thru 12" – Ductile Iron
Flow Regulation Unit	Stainless Steel
Diaphragm	Reinforced EPDM
Spring	Stainless Steel
O-Rings	EPDM

The pipe system shall be properly ventilated to avoid risk of air pockets. Glycolic mixtures up to 50% are applicable (both ethylene and propylene). Bray can accept no responsibility if another actuator is used instead of the Bray actuator recommendation:
Water treatment to VDI 2035.

Simple Set Max - GA(S) Series Actuator Specifications

Technical Specifications

Non-Spring Return	**GA24-562**	On/Off, Floating and Modulating
Spring Return	**GASRE24-450**	On/Off, Floating and Modulating, Shaft Normally Retracted
	GASEX24-450	On/Off, Floating and Modulating, Shaft Normally Extended
Power Requirements	**On/Off, Floating and Modulating**	24 VAC (±20%) at 50/60 Hz or 24 VDC (±15%)
Positioner[1]	**Control Signal 1**	0 to 10 V, Ri> 100 kΩ
	Control Signal 2	4 to 20 mA, Ri = 50Ω
	Position Feedback Signal	0 to 10 V, Load >2.5 kΩ
Action		Direct or Reverse Acting
Switching Range		300 mv
Power Consumption[2]	**Non-Spring Return** **Spring Return**	10W, 18VA 7.5W, 20VA
Force	**Non-Spring Return** **Spring Return**	562 lbs. (2,500 N) 450 lbs. (2,000 N) Power stroke and spring stroke
Stroke		0" to 1.93" (0-49mm)
Max. Temperature of Medium[3]		266˚F (130˚C)
Ambient Conditions	**Temperature**	14˚F to 131˚F (-10˚ to 55˚C)
	Humidity	0 to 95% RH without condensation
Level of Protection		IP 66. Not intended for outdoor use without additional protection.
Enclosure		Self-extinguishing plastic
Gear Materials	**Gears & Gearbox** **Mounting Column** **Mounting Bracket**	Steel Stainless Steel Cast Light Alloy
Electrical Connection		13 AWG (2.5 mm²) with screw terminals. Three knock-out cable entries for M20×1.5 (2×) and M16×1.5
Motor Run Time sec. per in. (mm)		51 (2), 102 (4), 153 (6), Dip Switch Adjustable
Spring Run Time[4]		15… 30 seconds
Number of Spring Returns		> 40,000
Response Time - 3-Point		200 ms
Weight	**Spring Return** **Non-Spring Return**	12.3 lbs. (5.6 kg) 9.1 lbs. (4.1 kg)
UL Listed		Temperature-Indicating and Regulating Equipment, XAPX, XAPX7. File E366456

[1] Also for On/Off (2-point) or Floating (3 point) depending on the connection for 24V~
[2] Design the transformers for this value, otherwise functional faults may occur.
[3] An intermediate piece is required for medium temperatures between 266˚F (130˚C) and 464˚F (240˚C)
[4] The return time corresponds to a stroke of 0.55 in. (14 mm) to 1.58 in. (40 mm) and does not depend on the set run time.

Disclaimer - *The performance specifications are nominal and conform to acceptable industry standards. For application at conditions beyond these specifications, consult the local Bray office. Bray, Inc. shall not be liable for damages resulting from misapplication or misuse of its products.*

Simple Set Max - Dimensions — 2-1/2" - 12"

Simple Set Max Dimensions with PAM24-112 Actuator — 2-1/2" - 3"													
MODEL #	Connection		Flow Range	Please reference the illustration									
				L		H		H1		D		Weight	
x=Flow in GPM	in.	mm	GPM	in.	mm	in.	mm	in.	mm	in.	mm	lb	kg
SSM-250-A-L-x	2-1/2	65	19.27 - 110.06	10.87	276	3.50	89	15.50	394	7.01	178	35	16
SSM-250-A-H-x	2-1/2	65	26.21 - 154.11	10.87	276	3.50	89	15.50	394	7.01	178	35	16
SSM-3-A-L-x	3	80	25.53 - 149.78	11.73	298	3.74	95	16.35	415	7.52	191	55	25
SSM-3-A-H-x	3	80	30.92 - 189.47	11.73	298	3.74	95	16.35	415	7.52	191	55	25

Simple Set Max Dimensions with GA(S) Actuators — 2-1/2" - 12"													
MODEL #	Connection		Flow Range	Please reference the illustration									
				L		H		H1		D		Weight	
x=Flow in GPM	in.	mm	GPM	in.	mm	in.	mm	in.	mm	in.	mm	lb	kg
SSM-250-A-L-x	2-1/2	65	19.27 - 110.06	10.87	276	3.50	89	19.12	486	7.01	178	41	19
SSM-250-A-H-x	2-1/2	65	26.21 - 154.11	10.87	276	3.50	89	19.12	486	7.01	178	41	19
SSM-3-A-L-x	3	80	25.53 - 149.78	11.73	298	3.74	95	19.98	507	7.52	191	61	28
SSM-3-A-H-x	3	80	30.92 - 189.47	11.73	298	3.74	95	19.98	507	7.52	191	61	28
SSM-4-A-L-x	4	100	53.41-299.41	13.86	352	4.49	114	24.52	623	9.02	229	123	56
SSM-4-A-H-x	4	100	64.99-396.54	13.86	352	4.49	114	24.52	623	9.02	229	123	56
SSM-5-A-L-x	5	125	81.45-484.32	15.75	400	4.92	125	25.58	650	10.00	254	171	78
SSM-5-A-H-x	5	125	101.26-594.37	15.75	400	4.92	125	25.58	650	10.00	254	171	78
SSM-6-A-L-x	6	150	112.71-651.59	17.76	451	5.47	139	27.26	692	10.98	279	241	109
SSM-6-A-H-x	6	150	140.89-858.56	17.76	451	5.47	139	27.26	692	10.98	279	241	109
SSM-8-A-L-x	8	200	418-925	23.62	600	8.23	209	27.38	695	14.96	380	386	175
SSM-8-A-H-x	8	200	572-1233	23.62	600	8.23	209	27.38	695	14.96	380	386	175
SSM-10-A-L-x	10	250	837-2091	28.74	730	9.02	229	33.44	849	17.48	444	677	307
SSM-10-A-H-x	10	250	1079-2642	28.74	730	9.02	229	33.44	849	17.48	444	677	307
SSM-12-A-L-x	12	300	837-2091	33.46	850	10.98	279	33.44	849	20.47	520	1036	470
SSM-12-A-H-x	12	300	1079-2642	33.46	850	10.98	279	33.44	849	20.47	520	1036	470

Allow 3.5" clearance for actuator removal.
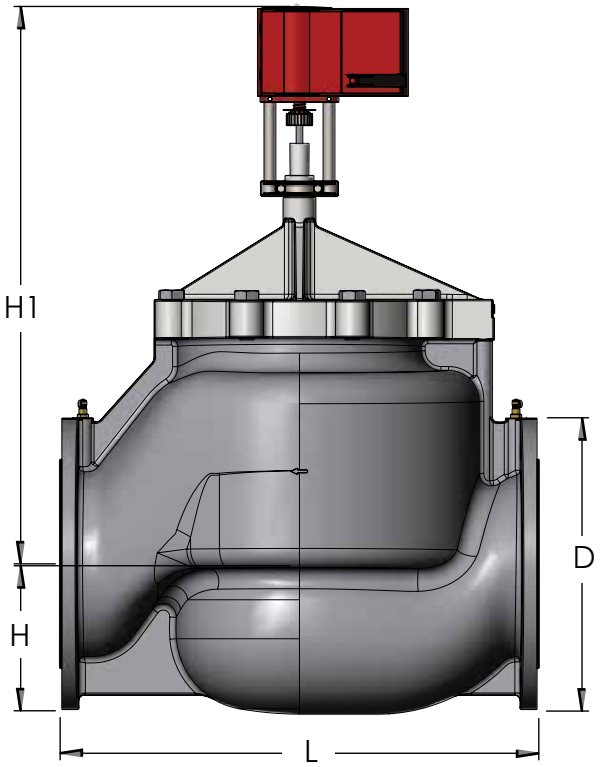
Weights shown are for valve/actuator assemblies
Add 3.2 lbs. (1.5 kg) for spring return actuator