W-OLC Mechanical Oil Level Regulator

The W-OLC controls the oil level in the compressor crankcase with a float operated valve and keeps the oil level at the compressor manufacturer's recommended level. It is a direct replacement of popular competitive models.

Features

- Corrosion resistant epoxy powder paint finish
- Universal mounting pattern for standard semi-hermetic compressors

Nomenclature example: W-OLC-2

W-OLC	2
Series	Sight Glass*

* 2 = 1/2, 4 = 1/4, 2 -4 = adjustable

Specifications

- Maximum working pressure: 450 psi
- UL/CUL file number: SA8547
- Max. OPD: 90 psi

Ordering Information

PCN	Description	Sight Glass Level
064953	W-OLC-2	1/2 sight glass
064954	W-OLC-4	1/4 sight glass
065170	W-OLC-2-4	1/4 to 1/2 level (adjustable)

Dimensional Data

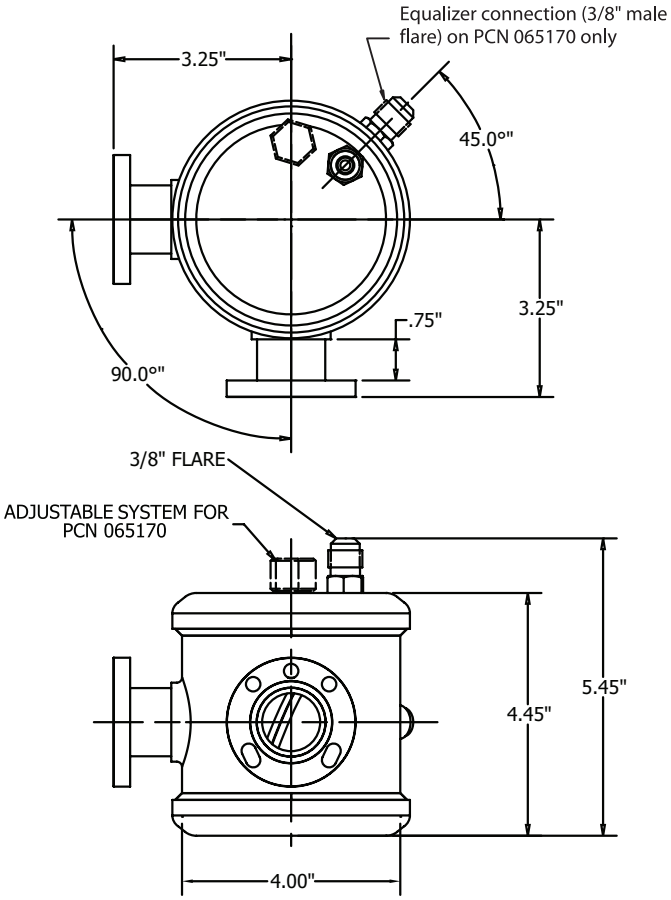

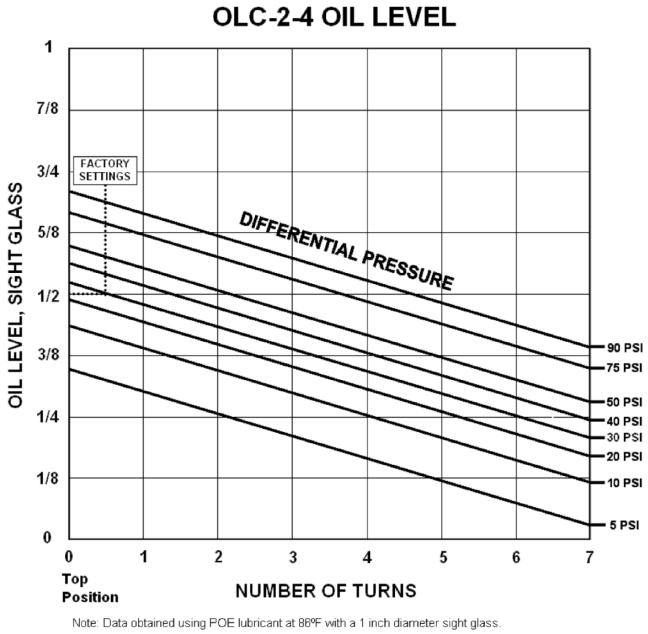

The Oil Level factory setting is in the middle of the Sight Glass at 30 PSI for the Oil Level Control. Located on the top of the control is the seal cap. Remove this to adjust the oil level. To adjust the stem, turn it clockwise and counterclockwise, respectively, to lower and raise the stem. One can determine the adjustment needed from the OLC-2-4 Oil Level Chart. One eighth of an inch increments are used to illustrate the oil level at a selection of differential pressure conditions.

Unlike our Competitors Controls no damage will occur when attempting to adjust beyond 7 turns. Our Design has a hard Stop to prevent damage.

In the case of an unexpected system defrost or load increase, large amounts of oil will return through the suction line. Consequently, the oil control will not be able to keep the oil level from rising beyond the control point.

See adapters page.